Chum Power

CHUMPOWER

TOOL CATALOG

銓 寶 精 密 配 件 產 品 型 錄

TOOL CATALOG

銓寶精密配件產品型錄

Chum Power

A Complete Service to Meet Your Need

ニーズに応える完全なサービス

ABOUT COMPANY

CHUMPOWER founded in 1981, is a well-known precision chuck manufacturer. The products are marketing and proved excellent all over the world.

Drill chuck is necessary in the industrial application. It is used popularly such as all kinds of lathes, hand tools, power tools, air tools, medical appliances, and so on. In terms of the importance of chuck tool, CHUMPOWER keeps on doing all efforts in technological research, development and application and holds creative spirit in technique, product-development, and quality-control.

To manufacture high quality and high precision tooling chucks, CHUMPOWER most processing equipment are dominated by international renowned brands, such as DMG MORI 5-axis milling machine, Hartford, +GF+(Georg Fischer)... etc, the These precision machinery can be used in manufacture highly complex components, allowing greater precision in lesser time than ordinary machineries and enabling us to meet client customization demands that require diversity in small quantities.

CHUMPOWER has advanced production equipments, abundant experiences and is able to innovate on designing good products for customers, other than our extensive experience in manufacturing and production, we have always believed that only through stringent inspections will we be able to create high quality and high precision tooling chucks. In addition to using internationally renowned brands such as HAIMER, ZIESS, and MITUTOYO, we will conduct inspections on the products from assembly, finished product warehousing, to pre-delivery.

We pursue the highest quality and complete management which caused the esteemed chuck manufacturer in Taiwan. Moreover, we acquire great harvest from our customer and many international patents from the world. Till now, CHUMPOWER has approved of ISO, 'Taiwan Symbol of Excellence", and "Rising Star Award" for high quality.

CHUMPOWER devoted to develop easy-to-operate, strong function, good quality tools which especially combining the tools in hand to fulfill users different needs. In the coming future, we will put consistent faith "Energetic, Innovative, Creative" to develop the most perfect After-market services to meet user's needs. We deeply believe CHUMPOWER is your best cooperative.

Chum Power

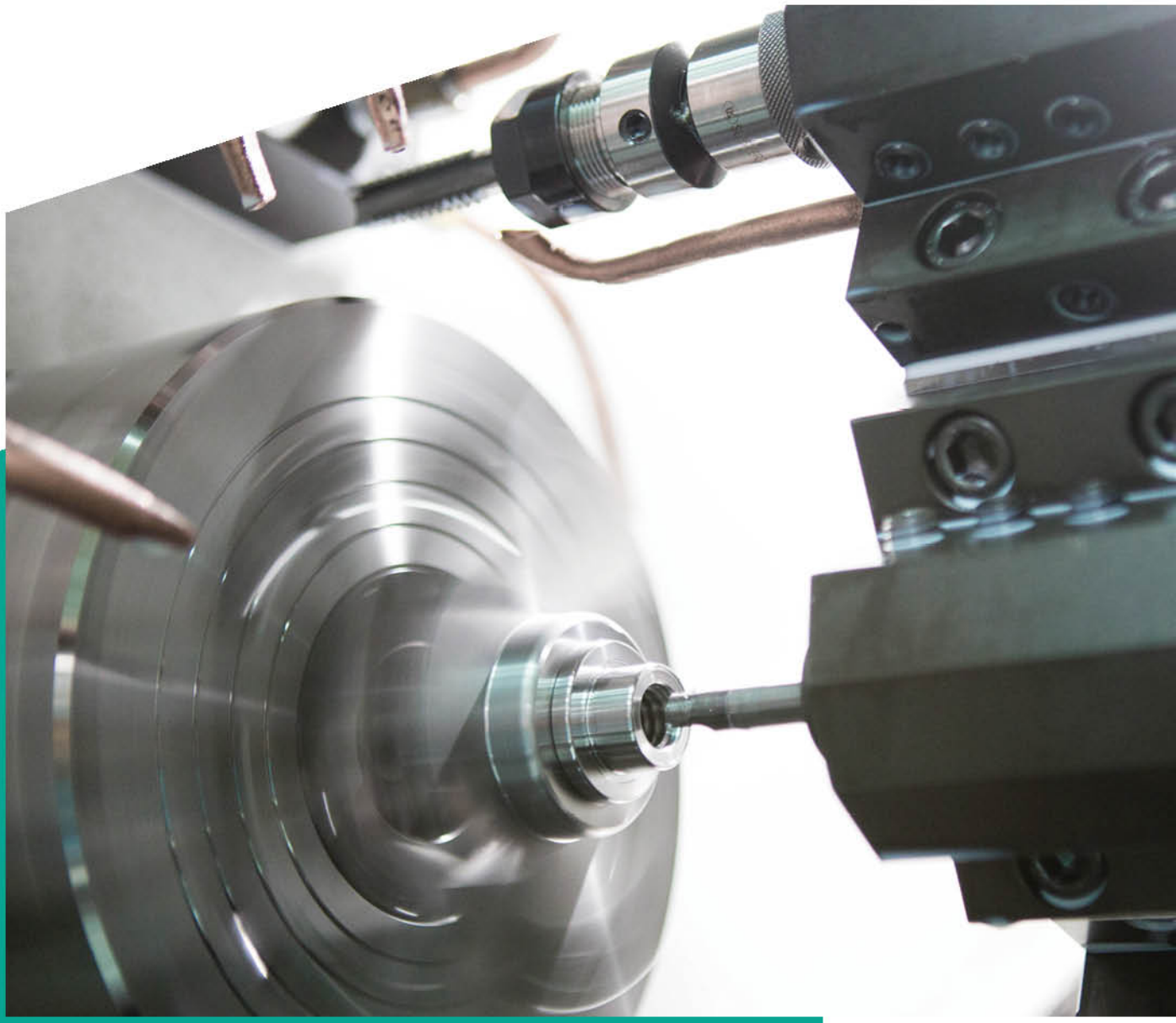

you can find the best tool chuck

最高のツールチャックを見つけることができます

銓寶工業股份有限公司創立於西元 1981 年，為世界知名的精密鑽夾頭製造公司，產品行銷全球，深獲國際肯定。

鑽夾頭是工業生產中不可或缺的工具，其用途非常廣泛，可應用在各式各樣的機床及手動、電動、氣動工具、醫療器材等。有鑒於夾頭工具的重要性，銓寶在精密夾頭的技術研究及應用開發方面，一向不遺餘力。

為了製作出高品質、高精密的夾頭，銓寶採用國際知名品牌工具機，包括 DMG MORI 五軸加工機、Hartford、+GF+(Georg Fischer)..... 等。這些造價昂貴的精密加工機，能製作高複雜的工件，比一般機台加工成效更好、精度更高、時間更短，能滿足少量多樣的客戶客制需求。

我們有不只擁有高品質、高精度的生產能力，嚴謹的檢測、採用國際大廠檢驗設備 (HAIMER、ZIESS、MITUTOYO)，產品從組裝到成品入倉、出貨前都會進行高標準的檢驗工作。銓寶在夾頭製造技術有超過 35 年的經驗以及創新的開發能力，在追求最高品質並結合完善的管理制度下，目前已躍升為台灣最大精密鑽夾頭製造公司。不斷地創新與研發，更取得多項國際專利。在品質方面，取得 ISO 品質認證、台灣精品獎和小巨人獎等。

銓寶致力於開發操作簡單、功能性強、品質精良並能結合現有工具一同使用之產品，讓各項工具的功能發揮到極致、靈活運用，滿足使用者不同的需求。未來，我們將秉持一貫的理念「活力團隊、創新價值、塑造未來」，發展出最符合使用者的需求及最完善的售後服務，成為您最佳的合作夥伴。

銓宝工業株式会社は、1981 年に設立した世界的に有名な精密ドリルチャック製造業者です。弊社の製品を全世界に販売し、国際的にも高い評価を受けています。

ドリルチャックは工業生産では欠かせない工具であり、用途が非常に幅広く、さまざまな工作機械及び手動、電動工具、エアツール、医療用具などに応用可能です。銓宝ではチャック工具の重要性を考慮に入れ、精密チャックの技術研究と応用開発の分野で、努力を怠らずに歩み続けてまいりました。

品質と精度の高いチャックを製造するために、銓宝では DMG MORI 5 軸複合加工機、Hartford、+GF+(Georg Fischer)... など国際的な有名ブランドの工作機械を導入しています。こうした高価な精密マシ＿ングセンタにより、非常に複雑なワークが製作できるようになりました。そのため、一般の機械よりも加工の効果、精度が高まり、より短時間で、お客様の少量多種というカスタマイズされた＿ーズに応えられるようになったのです。

弊社は品質と精度の高い生産能力を擁しているだけではありません。計測も厳密に行い、国際的な大手メーカーの検査設備 (HAIMER、ZIESS、MITUTOYO) を導入し、製品には組立から完成品の入庫、出荷前まで高い基準での検査作業を行っています。銓宝はチャック製造技術では 35 年を超える経験と革新的な開発能力を誇ります。最高の品質を追い求め、更には完備された管理制度を持つことで、現在すでに台湾の最大精密ドリルチャック製造会社に跳ね上がりました。そして絶えず革新と研究開発を重ね、国際特許も数多く取得してきました。また弊社は品質面では、ISO 品質認証、台湾エクセレンス賞及び小巨人賞 (Rising Star Award) などを取得しています。

銓宝では、操作が簡単で、機能性が高く、優れた品質で既存の工具に合わせて使える製品の開発に尽力してきました。こうして各種工具の機能が極限にまで発揮され、弾力的に活用できるようになり、使用者のさまざまな＿ーズをかなえています。弊社は将来も、「活力あるチームワーク、価値の革新で、未来を築く」という変わらぬ理念を貫いてまいります。また、使用者の＿ーズに最もかなった、そして最も完備されたアフターサービスを発展させ、お客様にとって最高の提携パートナーとなることでしょう。

CHUMPOWER the best provider of spindle drill heads!

Annual export of more than 250,000 sets of precision drill chucks Customers in five continents around the world.

A Chuck System 夾頭系列

015
Titanium Jaws Chuck
Keyless Type Mount

#122
Special Heavy Duty Model

016-017
Keyless Taper Mount / Hook wrench

#123 #124 #128

018
Keyless Thread Mount

#125

019
Titanium Jaws Chuck
Arbor Type

#126
Special Heavy Duty Model

020
Titanium Jaws Chuck
Tool Shank Type

#127
Special Heavy Duty Model

021
Stainless Steel Drill Chuck

#129

022
Stainless Steel Drill Chuck

#130

023
Hex Key Drill Chuck

#133(E)

024-025
Key Type / Key

#141 #116

B EX-POWER Universal Chuck 泛用型夾頭

027
EX-POWER

028
Hook Wrench

#600

029
Interchangeable Series

#610

030
Integrated/Monblock

#620
BT Series

031
Screwed in One Piece

#622
BT/JIS B6339 Series

C Tap Chuck 絲攻夾頭

033 Quick Change Tapping Chuck Length Compensation / Extra Length	**034** Quick Change Tapping Chuck Length Compensation / Straight Shank-Collets	**035** Quick Change Tapping Chuck Length Compensation / Morse Taper Shank
035 Quick Change Tapping Chuck Adapter 	**036** Quick Change Tapping Chuck Straight Shank	**037** Quick Change Tapping Chuck Straight Shank / Morse Taper Shank
038 Quick Change Tap Collets with Overload Clutch JIS Type	**039** Quick Change Tap Collets with Overload Clutch DIN 371 Type	**040** Quick Change Tap Collets With Overload Clutch DIN 376 Type
041 Quick Change Tap Collets With Overload Clutch ISO 529 Type	**042** Quick Change Tap Collets With Overload Clutch ISO 529 / 2283 Type	**043** Quick Change Tap Collets-Rigid Type JIS Type
044 Quick Change Tap Collets-Rigid Type DIN 371 Type	**045** Quick Change Tap Collets-Rigid Type DIN 376 Type	**046** Quick Change Tap Collets-Rigid Type ISO 529 Type

047
Quick Change Tap Collets-Rigid Type

SO 529 / 2283 Type

048
Quick Change Tap Collets with Overload Clutch-Rigid Type

JIS Type

049
Tap Chuck Reducer Adjustable Pin Wrenches

050
Universal Tap Chuck -Inner Taper Hole

050
Universal Tap Chunck -Morse Taper Shank

051
Air Tapping Machine

D SpindleClamping System 主軸配件

053
MAS 403 PULL STUD TYPE CLAMPING

055
CAT PULL STUD TYPE CLAMPING

056
DIN69872 PULL STUD TYPE CLAMPING

057
OTT PULL STUD TYPE CLAMPING

059-061
OTT ISO PULL STUD TYPE CLAMPING

062
Force Multiplication System

063
HSK Gripper

064
HSK Gripper

065
Shaft Coupling

067
Spray Nozzle Series
Press Fit Type

068
Spray Nozzle Series
Thread Mount Type

069
Spray Nozzle Series
Thread Mount Type

071
Spray Nozzle Series
Leak Lock Type

General Stainless

073
Spray Nozzle Series
Plastic Type

074
EZ-BAR
LASER COOLANT POINTER

E Tooling System 刀桿系統

077
BT CHU CNC DRILL CHUCK

078-079
BT ER COLLET CHUCK

080
BT MILLING CHUCK

081
BT CHUCK For High-Speed Machining

082
Hydraulic Tool-Holder

084
CAT CHU CNC DRILL CHUCK

085
CAT ER COLLET CHUCK

086
CAT MILLING CHUCK

087
SK CHU CNC DRILL CHUCK

088 SK ER COLLET CHUCK 	**089** SK MILLING CHUCK 	**090** HSK CHU CNC DRILL CHUCK
091-092 HSK ER COLLET CHUCK 	**093** HSK MILLING CHUCK 	**094** BT Hex Key Drill Chuck
094 SK Hex Key Drill Chuck 	**095** HSK Hex Key Drill Chuck 	**095** VDI Hex Key Drill Chuck
096 HEX KEY DRILL CHUCK Arbor Type - Morse Taper 	**096** HEX KEY DRILL CHUCK Arbor Type-D 	**097-098** BT/Threading BT/Coolant Thur-Hole M Coolant Pipe
099 DIN A/B/R Type ISO A/B Type CAT Standard Models 	**099** BT(S) Type of car bou layer maps 	**100-102** ER Spring Collet System
103 SK Spring Collet System A Class 	**104** Straight Collet ER Straight Collet Chuck 	**106** Z Axial Preset Gauge Tool Holder Locking Device

107
Tool Locking Device

107
Tool Locking Device A Type

108
T aper Wiper BT Type

108
Taper Wiper HSK Type

109
Nuts

110
Finder ER Spanner / Hook Wrenches

111
Optical Edge Finder

F Vises System 虎鉗系統

113
MC Hydraulic & Angle Lock Vise

113
MC Compact Vise

114
MC Mechanicakl Power Vise

115
Self Centring Vise

116
Self Centring Vise

G Angle Head 橫向銑頭

121 90° Angle Head-ER 	**122** 90° Angle Head-FA 	**123** 90° Angle Head-BT
124 90° Angle Head-ER 	**125** 90° Angle Head-FA 	**126** Modular Angle Head-Compact
127 Modular Angle Head-Compact 	**128** Modular Angle Head-45° 	**129** Universal Angle Head
130 Heavy Duty Angle Head 	**131** Heavy Duty Angle Head-Longer 	**132** Multi - block Angle Head-BT
133 Multi - block Angle Head-HSK 	**134** Multi - block Angle Head-HSK (Int.) 	**135** Heavy Duty Angle Head (VTC)

136 Light Angle Head 	**137** 90° Angle Head 	**138** Light Angle Head-Universal
139 Angle Head-Ultra Slim 	**140** Aluminum Angle Head 	**141** Aluminum Angle Head (Int.)
143 Aluminum Offset Angle Head 	**143** Setting Block / Stopper 	**143** Customized Setting Block / Stopper
144 Customized Flange 	**144** Extension 	**144** Collet

J Endmill & Face Milling Cutter Systems 端銑刀及面銑刀

147 CJU Drilling & Milling Endmill #A001	**148** EHU High-Speed Endmill #A003	**149** EHJ Drilling & Milling Endmill #A004

150 ESRF High-Feed Milling Cutter #A005	**151** CEX High-Speed Endmill #A006	**151** CAP300R High-Speed Rough Endmill #A007
152 CAP400R High-Speed Rough Endmill #A008	**153** CAP400R Face Milling Cutter #A009	**153** SFM Shoulder Face Milling Cutter #A010
154 CRS Radius Endmill #A013	**155** CRP Radius Endmill #A014	**156** CRP Radius Endmill #A015
157 CRS Radius Face Milling Cutter #A016	**157** CRT Radius Face Milling Cutter #A017	**158** CRT Radius Face Milling Cutter #A018
158 C2139 Ball-Nose Endmill #A020	**159** C2139 Ball-Nose Endmill #A021	**159** CBP Ball-Nose Endmill #A022
160 TB Twin- Blade Boring Bar #A023	**161** XEM High Efficiency Rough Endmill #A024	**161** RGH Shell-Type Rough Milling Cutter #A025

162 RGH BT50/NT50 Rough Milling Cutter #A026	**162** RGH Rough Milling Cutter #A027	**163** ESR High-Efficiency EndMill #A029
163 ESR High-Efficiency Milling Cutter #A030	**164** TCM 45° Chamfering Endmill #A031	**164** CM 45° Chamfering Endmill #A032
164 CH Bolt Countersink Endmill #A033	**165** TS T-Slot Endmill #A034	**165** SE High-Speed Face Milling Cutter #A035
166 SE High-Speed Face Milling Cutter #A036	**166** SE445 Face Milling Cutter #A037	**167** TPR Shoulder Endmill #A038
168 TPR22 Shoulder Endmill #A039	**168** TPR R8-Shank Shoulder Endmill #A040	**169** TPR Shoulder Face Milling Cutter #A041
169 TPR Shoulder Face Milling Cutter #A042	**170** SC Side Milling Cutter #A043	**170** SCT T-Type Side Milling Cutter #A044

171 FP 15° Face Milling Cutter **#A045**	**171** 535,435 25° Face Milling Cutter **#A046.#A047**	**172** 545,445 45° Face Milling Cutter **#A048.#A049**
173 X-POWER Radius Milling Cutter **#A050**	**173** C2334 Radius Cutter **#A051**	**174** C2280 Octagon Face Milling Cutter **#A052**
174 SE13 High Speed Face Milling Cutter **#A053**	**175** RD Radius Comer Modular Endmill **#A054**	**175** RT Lighting Modular Endmill **#A054**
176 EXT Modular Extension Bar **#A056**	**176** RD Radius Corner Endmill **#A057**	**177** RT Lightning Endmill **#A058**
178 APX Hight-Speed Rough Endmill **#A059**	**178** C4033 Powerful Face Milling Cutter **#A060**	**179** EXD Power Super Drill 3D **#A062**
180 EXD Power Super Drill 4D **#A063**	**181** WEX Hight-Speed Rough Endmill **#A064**	**181** WEX Hight-Speed Rough Face Milling Cutter **#A065**

182 Screw	182 Wrench
#600	#600

Z Techinical Data 技術資料

189	EX-POWER® Standard Inspection Table	199	Keyless Drill Chuck Manual 自動鑽夾頭操作須知
190	Dynamic Balance Standard Formula List	201	Ex-Power Chuck Manual EX-Power 刀把裝配須知
191	JACOBS TAPER / DIN238 / DIN228"A TANG TYPE"/ DIN228 "B DRAW BAR TYPE"	203	Tap Chuck Torque Adjustment Manual 絲攻扭力調整須知
192	TECHNICAL DATA 技術資料 JIS B 6339	204	Keyless Drill Chuck Manual Keyless Drill Chuck 修護裝配
193	TECHNICAL DATA 技術資料 DIN 2080	205	Tap Chuck Section Instruction 絲攻夾頭半剖圖說明書
194	TECHNICAL DATA 技術資料 DIN 69871	207	Tap Chuck Manual Tap Chuck 裝配須知
195	TECHNICAL DATA 技術資料 DIN 69893 ATC	209	ER Collet Chuck Manual ER 刀把裝配須知
196	TECHNICAL DATA 技術資料 ASME B5.50	211	Milling Chuck Manual Milling Chuck 裝配須知
197	MOUNTING INSTRUCTION FOR ER-COLLETS PER DIN STD 6499-B	213	Hex Key Drill Chuck Manual 齒輪式夾頭操作須知
198	MOUNTING INSTRUCTION FOR ER-COLLETS PER DIN STD 6499-B	215	Stainless Steel Drill Chuck Manual Used In Medical Industry 醫療級不鏽鋼夾頭清潔保養說明書

Chum Power

Chuck System

夾頭系列

A

Titanium Jaws Chuck 鈦極系列

Keyless Taper Mount (錐孔) / Special heavy duty model 特重型系列 #122

- Extremely high accuracy and precision design, suitable for CNC machines and machine Center. All parts are ground, heat treated, surface treated and under specific QC condition.
- The clamping three jaws adopt high tech Titanium.
- The benefit of adopting Titanium is to increase the intensity and wear-resistance.
- 十分高精密之設計，適用於 CNC 及綜合切削機。
- 所有構成部份皆經過電鍍及表面熱處理且在嚴格品質管制控制之下。
- 夾爪採用高科技的鈦合金鍍膜，可使夾爪更耐磨耐用及確保精度。

S Type
Special Heavy duty model #122

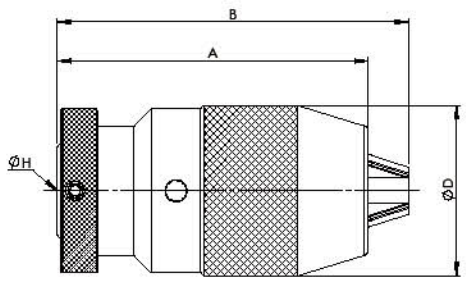

Description 品名 / Code No. 型號	Size 尺寸	Capacity 夾持範圍		ØH	Length 長度 (mm)		Outer Dia 外徑 (mm)	Weight 重量 (g)
		mm 公制	inch 英制		A	B		
BA12206201101A	6S	0.3-6.5	1/64-1/4	JT1	62	68	33	300
BA12206203303A	6S	0.3-6.5	1/64-1/4	B10	62	68	33	300
BA12208201101A	8S	0.3-8	1/64-5/16	JT1	70	77	38	425
BA12208201102A	8S	0.3-8	1/64-5/16	JT2S	70	77	38	425
BA12208201103A	8S	0.3-8	1/64-5/16	B10	70	77	38	425
BA12208201104A	8S	0.3-8	1/64-5/16	B12	70	77	38	425
BA12210201102A	10S	0.3-10	1/64-3/8	JT2S	80	91	43	625
BA12210201103A	10S	0.3-10	1/64-3/8	JT33	80	91	43	625
BA12210201104A	10S	0.3-10	1/64-3/8	B10	80	91	43	625
BA12210201105A	10S	0.3-10	1/64-3/8	B12	80	91	43	625
BA12210201101A	10S	0.3-10	1/64-3/8	JT2	80	91	43	625
BA12210201106A	10S	0.3-10	1/64-3/8	B16	80	91	43	625
BA12213201101A	13S	0.3-13	1/64-1/2	JT2	90	102	50	1000
BA12213201102A	13S	0.3-13	1/64-1/2	JT3S	90	102	50	1000
BA12213201103A	13S	0.3-13	1/64-1/2	JT6	90	102	50	1000
BA12213201104A	13S	0.3-13	1/64-1/2	B12	90	102	50	1000
BA12213201105A	13S	0.3-13	1/64-1/2	B16	90	102	50	1000
BA12216201102A	16S	3-16	1/8-5/8	JT6	102	114	57	1320
BA12216201101A	16S	3-16	1/8-5/8	JT3	102	114	57	1320
BA12216201103A	16S	3-16	1/8-5/8	B16	102	114	57	1320
BA12216201104A	16S	3-16	1/8-5/8	B18	102	114	57	1320
BA12216201105A	16S	3-16	1/8-5/8	JT33	102	114	57	1320

* 3S 為鋼爪

Keyless Taper Mount (錐孔)

Heavy duty model 重型系列 #123

Industrial design especially for milling machines and drilling machines. All hardened parts ensure long life and safety while in operation.

擁有工業（工學）之設計，特別是針對銑床及鑽床機械。所有堅固的組成部份必能確保操作期間此鑽夾頭之安全性及高長效使用壽命。

H Type
Heavy duty model #123

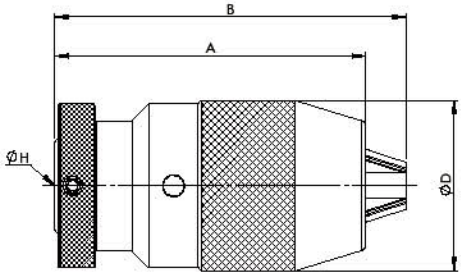

Description 品名 / Code No. 型號	Size 尺寸	Capacity 夾持範圍		ØH	Length (mm) 長度		ØD	Weight 重量 (g)
		mm 公制	inch 英制		A	B		
BA12306101101A	6H	0.3-6.5	1/64-1/4	JT1	62	68	33	310
BA12308101101A	8H	0.3-8	1/64-5/16	JT1	70	77	38	410
BA12308101102A	8H	0.3-8	1/64-5/16	JT2S	70	77	38	410
BA12308101103A	8H	0.3-8	1/64-5/16	B10	70	77	38	410
BA12308101104A	8H	0.3-8	1/64-5/16	B12	70	77	38	410
BA12310101101A	10H	0.3-10	1/64-3/8	JT2	80	91	43	630
BA12310101103A	10H	0.3-10	1/64-3/8	JT33	80	91	43	630
BA12310101102A	10H	0.3-10	1/64-3/8	JT2S	80	91	43	630
BA12310101104A	10H	0.3-10	1/64-3/8	B10	80	91	43	630
BA12310101105A	10H	0.3-10	1/64-3/8	B12	80	91	43	630
BA12313101102A	13H	0.3-13	1/64-1/2	JT33	90	102	50	940
BA12313101103A	13H	0.3-13	1/64-1/2	JT6	90	102	50	940
BA12313101105A	13H	0.3-13	1/64-1/2	B12	90	102	50	940
BA12313101107A	13H	0.3-13	1/64-1/2	B16	90	102	50	940
BA12313101101A	13H	0.3-13	1/64-1/2	JT2	90	102	50	940
BA12316101102A	16H	3-16	1/8-5/8	JT6	102	114	57	1300
BA12316101101A	16H	3-16	1/8-5/8	JT3	102	114	57	1300
BA12316101103A	16H	3-16	1/8-5/8	B16	102	114	57	1300
BA12316101104A	16H	3-16	1/8-5/8	B18	102	114	57	1300

* Custom Built products are available on request. * 特製品可依客戶需求訂製

Keyless Taper Mount (錐孔)

Medium duty model 中型系列 #124

Stable quality of tapered mounting, suitable for bench and pedestal drilling machines.

此錐孔規格之夾頭產品，擁有穩定之品質，適用於檯式鑽床及懸臂鑽床

Code No. 12404-2A
12404-3A

M Type
Medium duty model #124

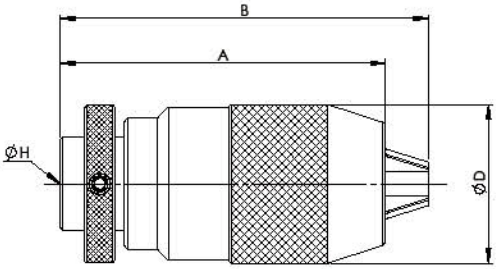

Description 品名 / Code No. 型號	Size 尺寸	Capacity 夾持範圍		ØH	Length (mm) 長度		ØD	Weight 重量 (g)
		mm 公制	inch 英制		A	B		
BA12413101101A	13M	0.5-13	1/64-1/2	JT2	87	99	43	648
BA12413101103A	13M	0.5-13	1/64-1/2	JT6	87	99	43	648
BA12413101106A	13M	0.5-13	1/64-1/2	B16	87	99	43	648
BA12413101102A	13M	0.5-13	1/64-1/2	JT33	87	99	43	648

* Custom Built products are available on request. * 特製品可依客戶需求訂製

Hook wrench (勾扳手系列)

Hook wtench model #128

Hook wtench suitable for #122 #126 #127 etc...

此系列適用於 #122 #126 #127 等夾頭

Description 品名 / Code No. 型號	Type 規格	Weight (g) 重量
BA12806000001A	6S	70
BA12808000001A	8S	82
BA12810000001A	10S	105
BA12813000001A	13S	120
BA12816000001A	16S	110
BA12820000001A	20S	130

* Custom Built products are available on request. * 特製品可依客戶需求訂製

Keyless Thread Mount (螺紋)

Medium duty model 中型系列 #125

Stable quality of threaded mounting, suitable for bench and pedestal drilling machines.
此螺紋規格之夾頭產品，擁有穩定之品質，適用於檯式鑽床及懸臂鑽床

Code No. 12503-2A
12503-3A

M Type
Medium duty model #125

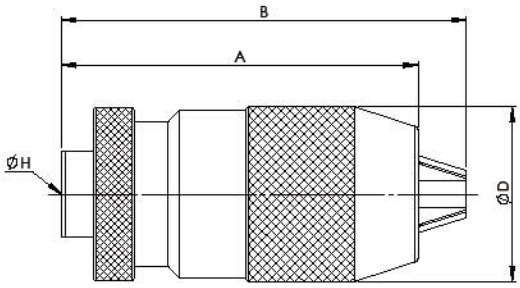

Description 品名 / Code No. 型號	Size 尺寸	Capacity 夾持範圍		ØH	Length (mm) 長度		ØD	Weight 重量 (g)
		mm 公制	inch 英制		A	B		
BA12513101103A	13M	1-13	1/32-1/2	1/2-20UNF	87	99	43	650
BA12513101101A	13M	1-13	1/32-1/2	3/8-24UNF	87	99	43	650

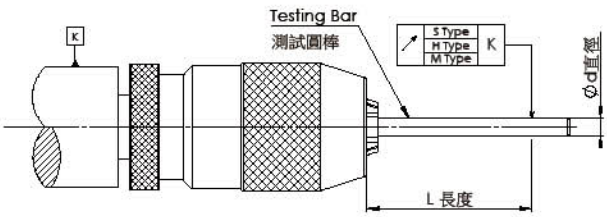

Keyless Drill Chuck Run Out Table Keyless
鑽夾頭同心度檢驗表

Capacity 夾持範圍 mm	Φd 直徑 mm	L 長度 mm	S Type	H Type	M Type
8	4	35	0.05	0.07	0.15
	6				
	8	50			
10	6	35	0.05	0.07	0.15
	8				
	10	60			
13	6	55	0.05	0.07	0.15
	10				
	13	75			
16	6	55	0.05	0.07	0.15
	10				
	16	80			

* Custom Built products are available on request. * 特製品可依客戶需求訂製

Titanium Jaws Chuck 鈦極系列

Arbor Type(連柄一體式) / Special Heavy duty model 特重型系列 #126

Designed toghter with arbor structure makes its performance perfomance perfect for drilling press and machine center.Precisely machined and ground components ensure the tolerance and accuracy.The clamping three jaws adopt high tech Titanium.

The benefit of adopting Titanium is to increase the intensity and ewar-resistance.

附有夾頭柄結構之設計，使得它更適於銑床及綜合切削機且有更趨於完美之美現。
精密的機械工學和堅固耐用的組成確保了杓力及精度。

夾爪採用高科技的鈦合金鍍膜，可使夾爪更耐磨耐用及確保精度。

Code No. 型號	Description 品名	Type 規格	Capacity 夾持範圍 mm 公制	Capacity 夾持範圍 inch 英制	Taper Mount No. DIN or Jacobs 錐孔組接型式	Length 長度 (mm) A	Length 長度 (mm) B	Length 長度 (mm) D (mm) 外徑	Weight 重量 (g)	Spanner No. 適用勾板手
MT	BA12608201001A	8S	0.3-8	1/64-5/16	MT2	141	61	37	400	BA1280800001A
	BA12610201001A	10S	0.3-10	1/64-3/8	MT2	151	70	43	700	BA1281000001A
	BA12613201001A	13S	0.3-13	1/64-1/2	MT2	161	81	50	1010	BA1281300001A
	BA12613201002A	13S	0.3-13	1/64-1/2	MT3	180	81	50	1140	BA1281300001A
	BA12613201004A	13S	0.3-13	1/64-1/2	MT4	205	81	50	1490	BA1281300001A
	BA12616201001A	16S	3-16	1/8-5/8	MT3	185	85	57	1445	BA1281600001A
	BA12616201002A	16S	3-16	1/8-5/8	MT4	210	85	57	1770	BA1281600001A
	MT: 莫氏錐度柄									
D	BA12603301001A	*3S	0.3-3	1/64-1/8	D12	88.5	38	24	140	
	BA12606201001A	6S	0.3-6.5	1/64-1/4	D16	104	54	33	334	BA1280600001A
	BA12608201003A	8S	0.3-8	1/64-5/16	D20	121	61	37	510	BA1280800001A
	BA12613201005A	13S	0.3-13	1/64-1/2	D20	141	81	50	1030	BA1281300001A
	BA12613201006A	13S	0.3-13	1/64-1/2	D25	161	81	50	1190	BA1281300001A
	BA12613201007A	13S	0.3-13	1/64-1/2	D32	161	81	50	1405	BA1281300001A
	BA12616201003A	16S	3-16	1/8-5/8	D20	145	85	57	1330	BA1281600001A
	BA12616201004A	16S	3-16	1/8-5/8	D25	165	85	57	1480	BA1281600001A
	BA12616201005A	16S	3-16	1/8-5/8	D32	165	85	57	1700	BA1281600001A
	D: 直柄 *3S 為銅爪									
R	BA12613201008A	13S	0.3-13	1/64-1/2	R8	184	81	50	1260	BA1281300001A
	BA12616201006A	16S	3-16	1/8-5/8	R8	188	85	57	1530	BA1281600001A
	R: 不規則柄									

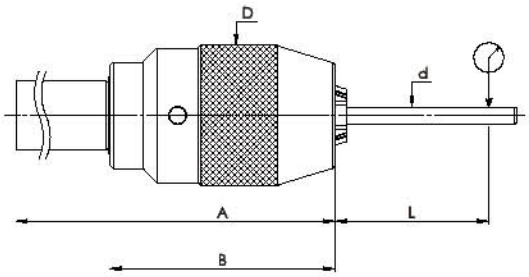

Keyless Drill Chuck Run Out Table Inspection
鑽夾頭同心度檢驗表

Type 規格	∅ d 直徑 mm	L 長度 mm	Max Run Out 最大同心度 mm
3S	2	30	0.05
	3		
6S	4	35	0.05
	6		
8S	4	35	0.05
	6		
	8	50	
10S	6	35	0.05
	8		
	10	60	
13S	6	55	0.05
	10		
	13	75	
16S	6	55	0.05
	10		
	16	80	

*Custom Buite products are available on request. * 特製品可依客戶需求訂製

Titanium Jaws Chuck 鈦極系列

Tool Shank Type (帶刀柄式) / Heavy duty & Special heavy duty model 重型及特重型系列 #127

Multi-choices of mounting specification offers quick changeover on machine center.
The clamping three jaws adopt high tech Titanium.
The benefit of adopting Titanium is to increase the intensity and wear-resistance.
擁有可搭配不同刀柄座規格之多重選擇；當您使用於綜合切削機時，它能讓您迅速地更換。
夾爪採用高科技的鈦合金鍍膜，可使夾爪更耐磨耐用及確保精度。

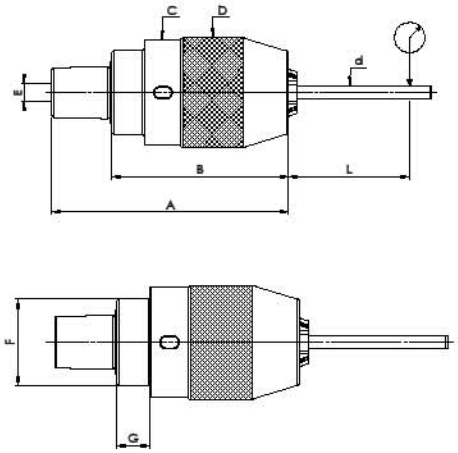

Description 品名 / Code No. 型號	Type 規格	Capacity 夾持範圍 mm 公制	Capacity 夾持範圍 inch 英制	Male Taper 錐柄組接型式	A mm	B mm	C mm	D mm	E mm	F mm	G mm	Weight (g) 重量	Spanner No. 適用勾扳手
BA12706201001A	6S	0.3-6.5	1/64-1/4	MT2	78	54	32	33	M6 P1.0	26.5	7.5	300	BA1280600001A
BA12708201001A	8S	0.3-8	1/64-5/16	MT2	85	60.5	36	37	M6 P1.0	30	10.5	400	BA1280800001A
BA12710201001A	10S	0.3-10	1/64-3/8	MT2	95	70	41	43	M6 P1.0	33.5	12	650	BA1281000001A
BA12713201003A	13S	0.3-13	1/64-1/2	MT3	107.5	80.5	48	50	M8 P1.25	38	15	960	BA1281300001A
BA12716201002A	16S	3-16	1/8-5/8	MT3	112	85	54.5	57	M8 P1.25	43	16	1250	BA1281600001A

組接示意圖

Keyless Drill Chuck Run Out Table Inspection
鑽夾頭同心度檢驗表

Type 規格	∮d 直徑 mm	L 長度 mm	S Type
6S	4	35	0.05
	6	35	
8S	4	35	0.05
	6		
	8	50	
10S	6	35	0.05
	8		
	10	60	
13S	6	55	0.05
	10		
	13	75	
16S	6	55	0.05
	10		
	16	80	

*Custom Buite products are available on request. * 特製品可依客戶需求訂製

Stainless Steel Drill Chuck 不銹鋼系列

Key Type Taper & Thread Mount 錐孔&螺紋 #129

(Used in electric dis charging machining) 放電用

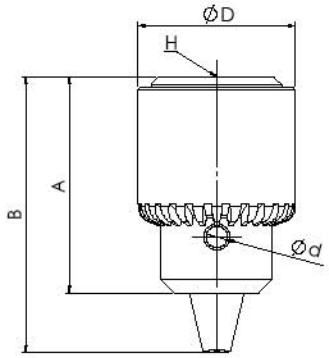

Description 品名 / Code No. 型號	Size 尺寸	H	Capacity 夾持範圍		Length 長度 (mm)		Outer Dia 外徑 (mm)	Weight 重量 (g)
			mm 公制	inch 英制	A	B		
BA129040PJ101A	4MTP	JT0	0.3-4	1/64-5/32	28	36	23	50
BA129060PJ201A	6MTP	JT1	0.5-6.5	1/64-1/4	40.5	49.7	31	125
BA129060HT201A	6MTP	3/8-24UNF	0.5-6.5	1/64-1/4	40.5	49.7	31	130
BA129100PJ401A	10MTP	JT2S	0.5-10	1/64-3/8	51	63	39	250
BA129100DD702A	10MTD	D13	0.5-10	1/64-3/8	57	69	37	250
BA129100DD803A	10MTD	D15	0.5-10	1/64-3/8	57	69	37	250
BA129100HT201A	10MTH	3/8-24UNF	0.5-10	1/64-3/8	51	63	39	250
BA129130PJ901A	13MTP	JT6	1 -13	1/32-1/2	63	77	45	420
BA129130HT301A	13MTH	1/2-20UNF	1 -13	1/32-1/2	63	77	45	420
BA129160PJ901A	16MTP	JT6	1 -16	1/32-5/8	76.5	95	55	725
BA129160HT301A	16MTH	1/2-20UNF	1 -16	1/32-5/8	76.5	95	55	725

* Custom Built products are available on request. * 特製品可依客戶需求訂製

Stainless Steel Drill Chuck 不銹鋼系列

Key Type Taper & Thread Mount 錐孔&螺紋 #130 / #140

#130:(Used in electric dis charging machining) 放電用
#140:(Used in medical industry) 醫療用

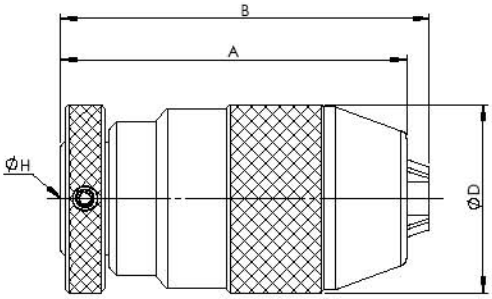

Code No. 型號	Description 品名	Size 尺寸	Capacity 夾持範圍 mm 公制	Capacity 夾持範圍 inch 英制	ØH	Length 長度 (mm) A	Length 長度 (mm) B	Outer Dia 外徑 (mm)	Weight 重量 (g)
#130 (放電用)	BA13003300002A	3S	0.3-3	1/64-1/8	JT0	44	47.5	24	110
	BA13003300003A	3S	0.3-3	1/64-1/8	JT1	46	49.5	24	110
	BA13006300001A	6S	0.3-6.5	1/64-1/4	JT1	63	69.5	33	300
	BA13008300002A	8S	0.3-8	1/64-5/16	JT1	70	77	38	425
#140 (醫療用)	BA14003300001A	3S	0.3-3	1/64-1/8	JT0	44	47.5	24	110
	BA14003300002A	3S	0.3-3	1/64-1/8	JT1	46	49.5	24	110
	BA14006300001A	6S	0.3-6.5	1/64-1/4	JT1	63	69.5	33	300

Titanium Jaws Chuck 鈦極系列

Hex Key Drill Chuck 齒輪式夾頭 #133

Arbor structure makes its performance perfect for drilling press and machine center.
Fine components ensure the tolerance and accuracy well.
The benefit of titanium jaws is to increase the intensity and wear-resistance.

1. 適合中高低轉速使用。
2. 輕鬆夾緊鑽頭、絲攻、鉸刀、銑刀。
3. 夾緊力可靠、信賴。
4. 夾緊力可達 400-750kgf · cm。
5. 鍍鈦爪設計，增加耐磨功能。
6. 可正反轉。
7. 精度佳。

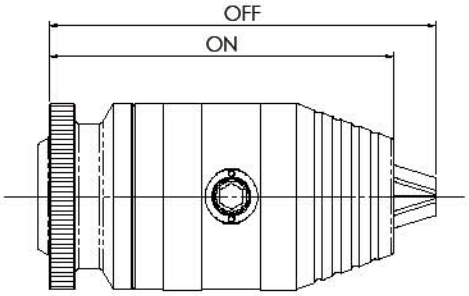

Code No. 型號	Size 尺寸	Taper & Thread Mount No. DIN or Jacobs 組接型式	Capacity 夾持範圍		Length 長度 (mm)		Weight 重量 (g)
			mm 公制	inch 英制	Open 三爪 (開)	Closed (閉)	
BA133132J0001A	GHK13S	JT6	0.3-13	1/64-1/2	94	105	988
BA133162J0001A	GHK16S	JT6	1.5-16	1/16-5/8	104	113	990
BA133132B0001A	GHK13S	B16	0.3-13	1/64-1/2	95	107	1000
BA133162B0001A	GHK16S	B16	1.5-16	1/16-5/8	104	115	1280

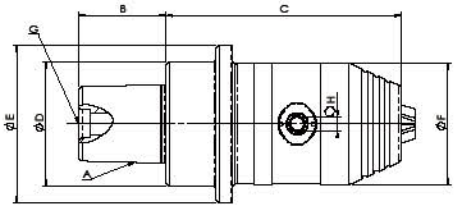

Code No. 型號	Size 規格	ΦA	B	Capacity 夾持範圍		C	ΦD	ΦE	ΦF	G	H	Weight 重量 (g)
				mm	inch							
BA133082M0001A	GHK8S	MT2	24	0.3~8	1/64~5/16	68	30	48	37	M6	4	535
BA133132M0001A	GHK13S	MT2	24	0.3~13	1/64~1/2	86.5	30	50	50	M6	6	1122
BA133162M0001A	GHK16S	MT2	24	1.5~16	1/16~5/8	91.5	30	50	50	M6	6	1124
BA133082M0002A	GHK8S	MT3	26.5	0.3~8	1/64~5/16	71.5	38	48	37	M8	4	680
BA133132M0002A	GHK13S	MT3	26.5	0.3~13	1/64~1/2	91	38	50	50	M8	6	1290
BA133162M0002A	GHK16S	MT3	26.5	1.5~16	1/16~5/8	96	38	50	50	M8	6	1220

* Custom Built products are available on request. *特製品可依客戶需求訂製

Stainless Steel Drill Chuck 不銹鋼系列

Key Type Taper & Thread Mount 錐孔&螺紋 #141

(Used in medical industry) 醫療用

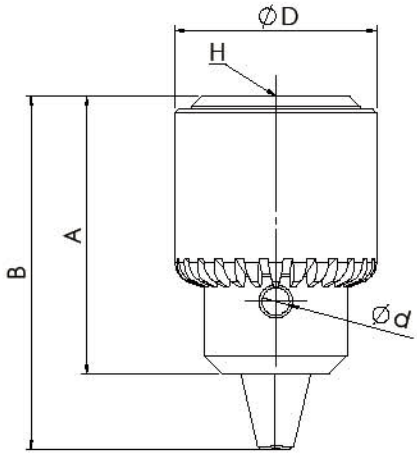

Description 品名 / Code No. 型號	Size 尺寸	ØH	Capacity 夾持範圍		Length 長度 (mm)		ØD Outer Dia. 外徑 (mm)	Weight 重量 (g)	Key Size 適用扳手
			mm 公制	inch 英制	A	B			
BA141040PJ101A	4MTP	JT0	0.3-4	1/64-5/32	28	36	22	50	Ø3.2
BA141040HT201A	4MTH	3/8-24UNF	0.3-4	1/64-5/32	28	36	22	50	Ø3.2
BA141060HT101A	6MTH	5/16-24UNF	0.5-6.5	1/64-1/4	40.5	49.7	28.5	130	Ø4
BA141060PJ201A	6MTP	JT1	0.5-6.5	1/64-1/4	40.5	49.7	29.4	125	Ø4
BA141060HT201A	6MTH	3/8-24UNF	0.5-6.5	1/64-1/4	40.5	49.7	28.5	130	Ø4
BA141100PJ401A	10MTP	JT2S	0.5-10	1/64-3/8	57	63	39	250	Ø5.5
BA141100HT201A	10MTH	3/8-24UNF	0.5-10	1/64-3/8	51	63	39	250	Ø5.5

* Custom Built products are available on request. * 特製品可依客戶需求訂製

Applications

1. Used in medical industry, especially in bone Surgery.
2. Used in electric discharging machining (EDM).
3. For special application on chemical-mixing.
4. For special application on food-mixing.
5. For special application on boat/ship-drilling.

產品適用

1. 醫療骨科手術工具
2. 細孔放電加工機 (EDM)
3. 實驗室攪拌
4. 食品攪拌

Design Features

1. Stainless material is applied to each Component.
2. Special design: Working smoothly.
3. Chemical surface treatment is made for each Component.
4. Anti-Corrosion (anti-rust) even if used in the environment of high acidity, high alkalinity or high humidity.
5. Radius design on sleeve; it would not rip the glove; therefore, minimizes the risk of Operator safety.
6. Smooth appearance: being Convenient for users.

特點

1. 所有零件採用不鏽鋼材質
2. 特殊設計，轉動順暢
3. 所有料件都經過化學表面處理
4. 在高酸性、高鹼性或高溼度的環境下使用，不易腐蝕 (生鏽)
5. 外殼弧角設計，不勾破手套，降低操作人員安全之風險
6. 滑順的外觀，使用更順手方便

Key 扳手

#116

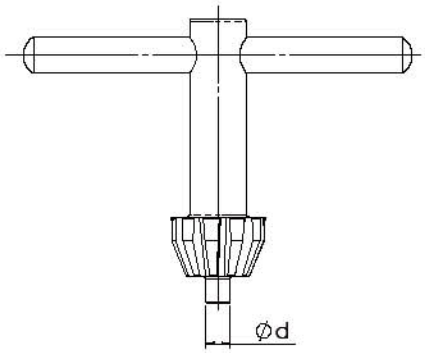

Code No. 型號	Ød	"Used on 適用規格"	Shape 扳手外型	Weight 重量 (g)
BA116040B0001A	Ø3.2	4MTP	噴砂 /T 型 – Sandblasting	16
BA116040B0002A	Ø3.2	4MTP	磁振 / T 型 – Polish	32
BA116040H0001A	Ø3.2	4MTP	鎖牙 / T 型 – Thread	26
BA116060A0001A	Ø4	6MTP	染黑 / 採耳式 – Black oxide	37
BA116060B0001A	Ø4	6MTP	噴砂 / T 型 – Sandblasting	39
BA116060B0002A	Ø4	6MTP	染黑 / T 型 – Black oxide	43
BA116100A0001A	Ø5.5	10MTP	染黑 / 採耳式 – Black oxide	46
BA116100C0001A	Ø5.5	10MTP	染黑 / 拇指型 – Black oxide	45
BA116100D0001A	Ø6	10MTP	鍍鎳 / 焊黏式 – Nickel Plated	41
BA116100B0001A	Ø5.5	10MTP/6MTP	噴砂 / T 型 – Sandblasting	47
BA116060A0002A	Ø6	10MTP	鍍鎳 / 採耳式 – Nickel Plated	46
BA116100A0002A	Ø6	10MTP	染黑 / 採耳式 – Black oxide	47
BA116130A0001A	Ø6.5	13MTP	染黑 / 採耳式 – Black oxide	52
BA116130C0001A	Ø6.5	13MTP	染黑 / 拇指型 – Black oxide	44
BA116130D0001A	Ø6	13MTP	染黑 / 焊黏式 – Black oxide	43
BA116160A0001A	Ø8	13MTP/16MTP	染黑 / 採耳式 –Black oxide	85
BA116160C0001A	Ø8	16MTP	染黑 / 拇指型 – Black oxide	87
BA116160B0001A	Ø8	16MTP	染黑 / T 型 – Black oxide	84

* Custom Built products are available on request. * 特製品可依客戶需求訂製

Chum Power

EX-POWER Universal Chuck

泛用型夾頭系列

B

Design Features

- Suitable forevery kind of machine tool cutters.
- Capable of drilling,yapping and twist Milling etc.
- The best sharp weapon against the depressed economic.
- Special structure with worldwinde patents.
- Able to calmp the tool for two-way machining.

設計特色

- 適合所有類型的切削工具機。
- 能鑽孔、攻牙、銑床加工。
- 是打擊低迷景氣最好的利器。
- 獨特設計，全球專利。
- 能雙向轉動夾持刀具。

HOOK WRENCH DIN1810A 勾扳手

#600

Code No. 型號	Size 尺寸	Weight 重量 (g)
BA12810000001A	8mm	100
BA16013000002A	13mm	160
BA16016000001A	16mm	250

Lntegral Universal Chucks
一體式夾頭操作說明

GRIP 鎖緊

RELEASE 鬆開

Clockwise(CW)
順時針方向

Counter-clockwise(CCW)
逆時針方向

EX-POWER Interchangeable Series 互換系列

#610

These chucks are specially designed for application in CNC drill chucks with the highest engineering standards. The female thread inside the short type BT makes it firmly screwed together with CNC machine.

此類夾頭是特別設計，應用於高工程標準的ＣＮＣ鑽夾頭。

BT 短型內螺紋可與ＣＮＣ車床緊密鎖上。

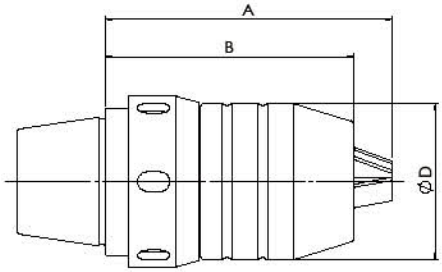

Design Features

- With integrated design, the drill chuck heads once screwed together with tool holder shank will never be disengaged from it.
- Great rigidity due to the special design.
- Excellent performance and reliability.
- High duranility and easy to operate.
- Superb accuracy is guaranteed because of 100%.
- All drill chucks are capable combined with SK,ISO,BT,VDI,HSK tool holder.

設計特色

- 一體設計，鑽夾頭與刀把鎖緊不鬆脫。
- 特殊設計，有良好的剛性。
- 性能優異，值得信賴。
- 耐磨損，容易操作。
- 精度準確：經嚴格品質控管。
- 此系列所有鑽夾頭皆可適用 SK、ISO、BT、VDI、HSK 刀桿。

Fig.1

Fig.2

Fig.2

Code No. 型號	Screw & Chuck Size 螺絲x 夾頭尺寸	Capacity 夾持範圍		Dimensions 規格		
		mm 公制	inch 英制	Close 閉 A / mm	Open 開 B / mm	Outer Dia 外徑 D / mm
BA16108200001A	M8*8mm	0.3-8	1/64-5/16	71	63.8	37.5
BA16113200001A	M8*13mm	0.3-13	1/64-1/2	92	79.5	50
BA16116200001A	M8*16mm	3-16	1/8-5/8	103	91	57

* Custom Built products are available on request. *特製品可依客戶需求訂製

EX-POWER JIS B6339 / MAS 403 BT 一體式系列

integrated / Monoblock Design Series #620

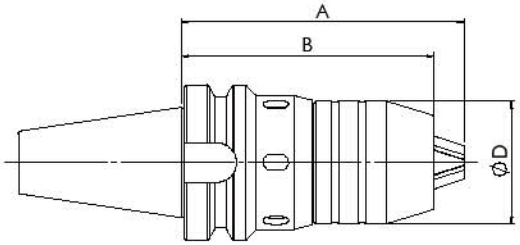

Design Features

- Designed to maximize drill chuck rigidity and precision on machine centers with automatic tool changer.
- The shank and Universal Drill Chuck are combined as one body, so that the Drill Chuck will not be fallen out when heavy cutting performed.
- The drill will not be dropped out when the main spindle of machine instantly stops.
- High precision can be maintained over a long period of time.

設計特色

- 設計功能－增強鑽夾頭的堅固性及精準性，於使用綜合加工中心機的換刀系統。
- 刀柄和鑽夾頭結合為一體。即使是做重切削的加工，鑽夾頭也不會脫落。
- 即使機器主軸立即停止，刀具也不會因此脫落。
- 超過長時間的使用，此夾頭仍保持高精度。
- 能雙向轉動夾持刀具。

Code No. 型號	Mount Type 組接形式	Size 尺寸	Capacity 夾持範圍		Dimensions 規格		
			mm 公制	inch 英制	Close 關 A / mm	Open 開 B / mm	Outer Dia 外徑 D / mm
BA2BT30620001A	BT30	8mm	0.3-8	1/64-5/16	90.5	83	37.5
BA2BT30620002A	BT30	13mm	0.3-13	1/64-1/2	114	107	50
BA2BT40620001A	BT40	8mm	0.3-8	1/64-5/16	95	87	37.5
BA2BT40620002A	BT40	13mm	0.3-13	1/64-1/2	115	103	50
BA2BT40620003A	BT40	16mm	3-16	1/8-5/8	121.5	108.5	57

* Custom Built products are available on request. * 特製品可依客戶需求訂製

EX-POWER BT/JIS B6339 組接式系列

#622

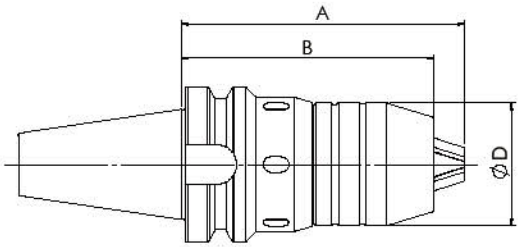

Design Features

- Designed to maximize drill chuck rigidity and precision on machine centers with automatic tool changer.
- High precision can be maintained over a long period of time

設計特色

- 設計功能－增強鑽夾頭的堅固性及精準性，於使用綜合加工中心機的換刀系統。
- 超過長時間的使用，此夾頭仍保持高精度。

Code No. 型號	Mount Type 組接形式	Size 尺寸	Capacity 夾持範圍		Dimensions 規格		
			mm 公制	inch 英制	Close 閉 A / mm	Open 開 B / mm	Outer Dia 外徑 D / mm
BA2BT40610001A	BT40	8mm	0.3-8	1/64-5/16	98	91	37.5
BA2BT50610001A	BT50	8mm	0.3-8	1/64-5/16	108.5	101	37.5
BA2BT50610002A	BT50	13mm	0.3-13	1/64-1/2	126.2	115.5	50
BA2BT50610003A	BT50	16mm	3-16	1/8-5/8	132.5	119.5	57

* Custom Built products are available on request. * 特製品可依客戶需求訂製

Chum Power

Tap Chuck

絲攻夾頭系列

C

Quick Change Tapping Chuck 快換式絲攻刀桿

With Length Compensation / Extra length 伸縮緩衝加長型

■ Feature / 特點

- Quick Change of Tap Adapters.
- Length Compensation could prevent tap from breaking upon tapping.
- 快換式絲攻連接桿
- 緩衝可預防絲攻在攻牙時斷落

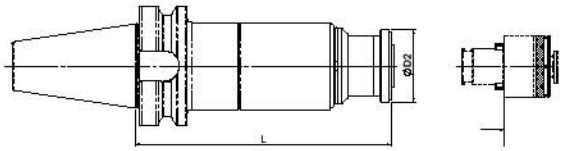

Code No. 型號	SPEC. 規格	Capacity 攻牙能力	L	ΦD2	Collets 適用筒夾	
BA2BT40331001A	BT40-WFE12-135	M3~M14	135	38	TC312	TC312B
BA2BT40331002A	BT40-WFE12-165	M3~M14	165	38	TC312	TC312B
BA2BT50331001A	BT50-WFE12-135	M3~M14	135	38	TC312	TC312B
BA2BT50331003A	BT50-WFE12-165	M3~M14	165	38	TC312	TC312B
BA2BT50331002A	BT50-WFE12-195	M3~M14	195	38	TC312	TC312B
BA2BT50332001A	BT50-WFE20-135	M8~M24	135	58	TC820	TC820B
BA2BT50332003A	BT50-WFE20-195	M8~M24	195	58	TC820	TC820B
BA2BT50332002A	BT50-WFE20-165	M8~M24	165	58	TC820	TC820B
BA2BT50333001A	BT50-WFE 33-200	M14~M36	200	62	TC1433	TC1433B

*Custom Built products are available on request. * 特製品可依客戶需求訂製 *Tap collets to be ordered separately. * 絲攻夾頭需另購

Quick Change Tapping Chuck 快換式絲攻刀桿

With Length Compensation 伸縮緩衝型

■ Feature / 特點

- Quick Change of Tap Adapters.
- Length Compensation could prevent tap from breaking upon tapping.
- 快換式絲攻連接桿
- 緩衝可預防絲攻在攻牙時斷落

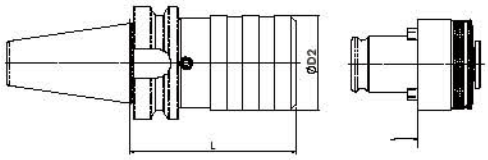

Code No. 型號	SPEC. 規格	Capacity 攻牙能力	L	ΦD2	Collets 適用筒夾	
BA2BT30321001A	BT30-WF12	M3~M14	70	36	TC312	TC312B
BA2BT40321001A	BT40-WF12	M3~M14	75	36	TC312	TC312B
BA2BT50321001A	BT50-WF12	M3~M14	85	36	TC312	TC312B
BA2BT30322001A	BT30-WF20	M8~M24	105	53	TC820	TC820B
BA2BT40322001A	BT40 WF20	M8~M24	95	53	TC820	TC820B
BA2BT50322001A	BT50-WF20	M8~M24	105	53	TC820	TC820B
BA2BT40323001A	BT40-WF33	M14~M36	160	78	TC1433	TC1433B
BA2BT50323001A	BT50-WF33	M14~M36	145	78	TC1433	TC1433B

*Custom Built products are available on request. * 特製品可依客戶需求訂製 *Tap collets to be ordered separately. * 絲攻夾頭需另購

Quick Change Tapping Chuck 快換式絲攻刀桿

With Length Compensation伸縮緩衝型 / Straight Shank-Collets直柄型-筒夾專用

■ Feature / 特點

- Quick Change of Tap Adapters.
- Length Compensation could prevent tap from breaking upon tapping.
- 快換式絲攻連接桿
- 緩衝可預防絲攻在攻牙時斷落

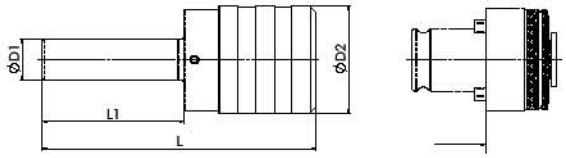

Code No. 型號	SPEC. 規格	Capacity 攻牙能力	L	L1	ΦD1	ΦD2	Collets 適用筒夾
BA362DD20W001A	D20-WF12	M3~M14	113	70	20	36	TC312/B
BA362DD32W001A	D32-WF12	M3~M14	113	70	32	36	TC312/B
BA361DD20W001A	D20-WF20	M8~M24	135	70	20	53	TC820/B
BA361DD32W001A	D32-WF20	M8~M24	135	70	32	53	TC820/B
BA363DD32W001A	D32-WF33	M14~M36	183	80	32	78	TC1433/B

*Custom Built products are available on request. * 特製品可依客戶需求訂製 *Tap collets to be ordered separately. * 絲攻夾頭需另購

Quick Change Tapping Chuck 快換式絲攻刀桿

With Length Compensation伸縮緩衝型
Straight Shank-Side-Lock & CNC Lathe直柄型-側固及CNC車床專用

■ Feature / 特點

- Quick Change of Tap Adapters.
- Length Compensation could prevent tap from breaking upon tapping.
- 快換式絲攻連接桿
- 緩衝可預防絲攻在攻牙時斷落

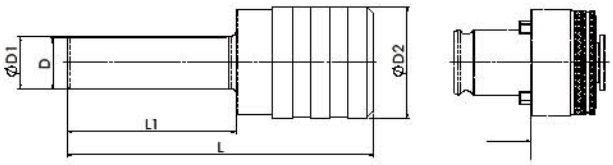

Code No. 型號	SPEC. 規格	Capacity 攻牙能力	L	L1	D	ΦD1	ΦD2	Collets 適用筒夾
BA362DA20W001A	D20A-WF12	M3~M14	113	70	19	20	36	TC312/B
BA362DA32W001A	D32A-WF12	M3~M14	113	70	31	32	36	TC312/B
BA361DA20W001A	D20A-WF20	M8~M24	135	70	19	20	53	TC820/B
BA361DA32W001A	D32A-WF20	M8~M24	135	70	31	32	53	TC820/B
BA363DA32W001A	032A-WF33	M14~M36	183	80	31	32	78	TC1433/B

*Custom Built products are available on request. * 特製品可依客戶需求訂製 *Tap collets to be ordered separately. * 絲攻夾頭需另購

Quick Change Tapping Chuck 快換式絲攻刀桿

With Length Compensation伸縮緩衝型 / Morse Taper Shank莫氏錐度型

■ Application / 用途 :

The products are suitable for Radial Drilling Machines, CNC Turning Centers, High-Speed Center Lathes, Drilling Machines, Radial Drilling Machines, Air Tapping Machines, Milling Machines and other machines with reversible spindles.

此產品適用於旋臂式鑽床，高速車床，直立式鑽床，銑床及其它可反轉的主軸

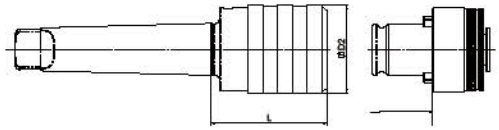

Code No. 型號	SPEC. 規格	Capacity 攻牙能力	L	ΦD2	Collets 適用筒夾
BA362MT02W001A	MT2-WF12	M3~M14	48	36	TC312/B
BA362MT03W001A	MT3-WF12	M3~M14	48	36	
BA362MT04W001A	MT4-WF12	M3~M14	49	36	
BA361MT02W001A	MT2-WF20	M8~M24	70	53	TC820/B
BA361MT03W001A	MT3-WF20	M8~M24	70	53	
BA361MT04W001A	MT4-WF20	M8~M24	72	53	
BA363MT04W001A	MT4-WF33	M14~M36	110	78	TC1433/B

*Custom Built products are available on request. * 特製品可依客戶需求訂製 *Tap collets to be ordered separately. * 絲攻夾頭需另購

Quick Change Tapping Chuck Adapter 快換式連接桿

■ Application / 用途 :

The products are suitable for Vertical Tapping Machines, Radial Drilling Machines, Vertical Drilling Machines, Milling Machines and other machines with reversible spindles and Power Tools and Air Tools.

此產品通用於直立式攻牙機，旋臂式鑽床，直立式鑽床，銑床及其它可反轉的主軸及電鑽工具，氣動工具。

■ Feature / 特點

- Specially designd for tapping machine
- Can connect to tap collet.
- Can easily quick change to the tap.
- 攻牙機台專用
- 可連接絲攻筒夾
- 可快速轉換絲攻

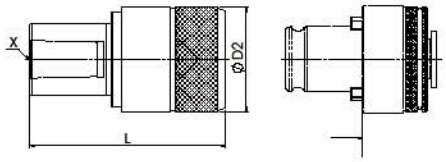

Code No. 型號	SPEC. 規格	Capacity 攻牙能力	L	ΦD2	X	Collets 適用筒夾
BA362JT06S001A	JT6-SF12	M3-M14	66	32	JT6	TC312/B
BA362BB16S001A	B16-SF12	M3-M14	66	32	B16	
BA362JT2SS001A	JT2S-SF12	M3-M14	61	32	JT2S	
BA362BB12S001A	B12-SF12	M3-M14	61	32	B12	
BA361JT06S001A	JT6-SF20	M8-M24	86	50	JT6	TC820/B
BA361BB18S001A	B18-SF20	M8-M24	92.5	50	B18	
BA361BB16S001A	B16-SF20	M8-M24	86	50	B16	TC820/B
BA363BB18S001A	B18-SF33	M14-M36	138	76	B18	TC1433/B

*Custom Built products are available on request. * 特製品可依客戶需求訂製
*Tap collets to be ordered separately. * 絲攻夾頭需另購

Quick Change Tapping Chuck 快換式絲攻刀桿

■ Feature / 特點

- Quick Change of Tap Adapters.
- Special designed for tapping.
- 快換式絲攻連接桿
- 絲攻專用

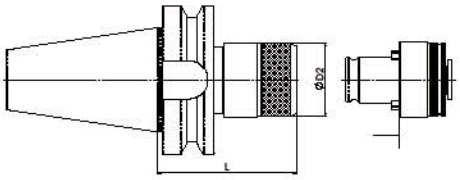

Code No. 型號	SPEC. 規格	Capacity 攻牙能力	L	ΦD2	Collets 適用筒夾
BA2BT40311001A	BT40-SF12	M3-M14	60	32	TC312/B
BA2BT50311001A	BT50-SF12	M3-M14	75	32	TC312/B
BA2BT40312001A	BT40-SF20	M8-M24	82	50	TC820/B
BA2BT50312001A	BT50-SF20	M8-M24	93	50	TC820/B
BA2BT40313001A	BT40-SF33	M14-M36	115	76	TC1433/B
BA2BT50313001A	BT50-SF33	M14-M36	126	76	TC1433/B

*Custom Built products are available on request. * 特製品可依客戶需求訂製 *Tap collets to be ordered separately. * 絲攻夾頭需另購

Quick Change Tapping Chuck 快換式絲攻刀桿

Straight Shank-Collets 直柄型-筒夾專用

■ Feature / 特點

- Quick Change of Tap Adapters.
- Special designed for tapping.
- 快換式絲攻連接桿
- 絲攻專用

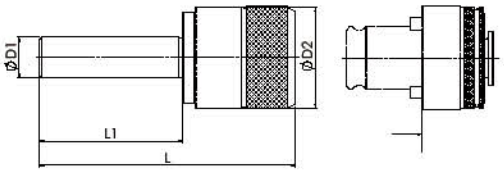

Code No. 型號	SPEC. 規格	Capacity 攻牙能力	L	L1	ΦD1	ΦD2	Collets 適用筒夾
BA362DD20S001A	D20-SF12	M3-M14	104	70	20	32	TC312/B
BA362DD32S001A	D32-SF12	M3-M14	106	70	32		
BA361DD20S001A	D20-SF20	M8-M24	124	70	20	50	TC820/B
BA361DD32S001A	D32-SF20	M8-M24	124	70	32		
BA363DD25S001A	D25-SF33	M14-M36	169	70	25	76	TC1433/B
BA363DD30S001A	D30-SF33	M14-M36	169	60	30		
BA363DD32S001A	D32-SF33	M14-M36	169	70	32		

*Custom Built products are available on request. * 特製品可依客戶需求訂製 *Tap collets to be ordered separately. * 絲攻夾頭需另購

Quick Change Tapping Chuck 快換式絲攻刀桿

Straight Shank-Side-Lock & CNC Lathe 直柄型-側固及CNC車床專用

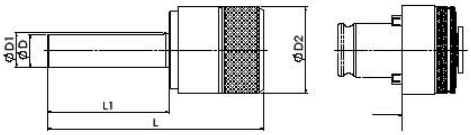

Code No. 型號	SPEC. 規格	Capacity 攻牙能力	L	L1	D	ΦD1	ΦD2	Collets 適用筒夾
BA362DA20S001A	D20A-SF12	M 3-M14	104	70	19	20	32	TC312/B
BA362DA32S001A	D32A-SF12	M 3-M14	106	70	31	32	32	TC312/B
BA361DA20S001A	D20A-SF20	M 8-M24	124	70	19	20	50	TC820/B
BA361DA32S001A	D32A-SF20	M 8-M24	124	70	31	32	50	TC820/B
BA363DA25S001A	D25A-SF33	M14-M36	169	70	24	25	76	TC1433/B
BA363DA32S001A	D32A-SF33	M14-M36	169	70	31	32	76	TC1433/B

*Custom Built products are available on request. * 特製品可依客戶需求訂製 *Tap collets to be ordered separately. * 絲攻夾頭需另購

Quick Change Tapping Chuck 快換式絲攻刀桿

Morse Taper Shank 莫氏錐度型

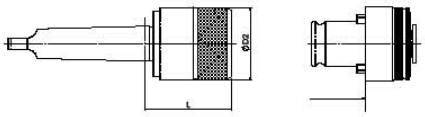

Code No. 型號	SPEC. 規格	Capacity 攻牙能力	L	ΦD2	Collets 適用筒夾
BA362MT02S001A	MT2-SF12	M 3~M14	39	32	TC312/B
BA362MT03S001A	MT3-SF12	M 3~M14	39	32	
BA362MT04S001A	MT4-SF12	M 3~M14	40.5	32	
BA361MT02S001A	MT2-SF20	M 8~M24	59	50	TC820/B
BA361MT03S001A	MT3-SF20	M 8~M24	59	50	
BA361MT04S001A	MT4-SF20	M 8~M24	60.5	50	
BA363MT03S001A	MT3-SF33	M14~M36	104	76	TC1433/B
BA363MT04S001A	MT4-SF33	M14~M36	105	76	

*Custom Built products are available on request. * 特製品可依客戶需求訂製
*Tap collets to be ordered separately. * 絲攻夾頭需另購

Quick Change Tap Collets with Overload Clutch
快換式絲攻夾頭 - 扭力型
JIS Type

■ Feature / 特性

· Overload Clutch is designed to prevent tap from breaking upon tapping.

· 扭力型絲攻設計，可預防絲攻在攻牙時斷落

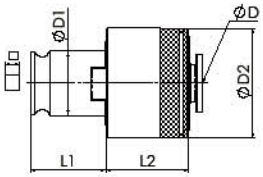

Code No. 型號	TC 312 JIS Tap			Tap Shank 絲攻尺寸 ΦD 柄徑	Tap Shank 絲攻尺寸 □四方孔	Capacity 攻牙能力	L1 (mm)	L2 (mm)	ΦD1 (mm)	ΦD2 (mm)
BA352JS020101A	M2			3.0	2.5	M3~M14	22	25	19	32
BA352JS030101A	M3		#5,#6	4.0	3.2					
BA352JS040101A	M4	M4.5	#8	5.0	4.0					
BA352JS050101A	M5	M5.5	#10	5.5	4.5					
BA352JS060101A	M6		UNC 1/4	6.0	4.5					
BA352JS080101A			UNC 5/16	6.1	5.0					
BA352JS080102A	M8	M7		6.2	5.0					
BA352JS090101A	M10	M9	UNC 3/8	7.0	5.5					
BA352JS110101A		M11	UNC 7/16	8.0	6.0					
BA352JS120101A	M12			8.5	6.5					
BA352JS130101A			UNC 1/2	9.0	7.0					
BA352JS140101A	M14	M15	UNC 9/16	10.5	8.0					

Code No. 型號	TC 820 JIS Tap			Tap Shank 絲攻尺寸 ΦD 柄徑	Tap Shank 絲攻尺寸 □四方孔	Capacity 攻牙能力	L1 (mm)	L2 (mm)	ΦD1 (mm)	ΦD2 (mm)
BA351JS050101A	M5	M5.5	#10	5.5	4.5	M8~M24	36	30.5	31	50
BA351JS060101A	M6		UNC 1/4	6.0	4.5					
BA351JS080102A			UNC 5/16	6.1	5.0					
BA351JS080101A	M8	M7		6.2	5.0					
BA351JS100101A	M10	M9	UNC 3/8	7.0	5.5					
BA351JS110101A		M11	UNC 7/16	8.0	6.0					
BA351JS120101A	M12			8.5	6.5					
BA351JS130101A			UNC 1/2	9.0	7.0					
BA351JS140101A	M14	M15	UNC 9/16	10.5	8.0					
BA351JS160101A			UNC 5/8	12.0	9.0					
BA351JS160102A	M16			12.5	10.0					
BA351JS180101A	M18		UNC 3/4	14.0	11.0					
BA351JS200101A	M20			15.0	12.0					
BA351JS220101A	M22		UNC 7/8	17.0	13.0					
BA351JS240101A	M24	M25		19.0	15.0					

Code No. 型號	TC 1433 JIS Tap			Tap Shank 絲攻尺寸 ΦD 柄徑	Tap Shank 絲攻尺寸 □四方孔	Capacity 攻牙能力	L1 (mm)	L2 (mm)	ΦD1 (mm)	ΦD2 (mm)
BA353JS140101A	M14	M15	UNC 9/16	10.5	8.0	M14~M36	56	41	48	72
BA353JS160101A			UNC 5/8	12.0	9.0					
BA353JS160001A	M16			12.5	10.0					
BA353JS170101A		M17		13.0	10.0					
BA353JS180101A	M18		UNC 3/4	14.0	11.0					
BA353JS200101A	M20			15.0	12.0					
BA353JS220101A	M22		UNC 7/8	17.0	13.0					
BA353JS240101A	M24	M25		19.0	15.0					
BA353JS260101A	M27	M26	UNC1	20.0	15.0					
BA353JS280101A	M28			21.0	17.0					
BA353JS290101A			UNC 1 1/8	22.0	17.0					
BA353JS300101A	M30			23.0	17.0					
BA353JS320101A	M32		UNC 1 1/4	24.0	19.0					
BA353JS330101A	M33			25.0	19.0					
BA353JS350101A	M35	M34	UNC 1 3/8	26.0	21.0					
BA353JS360101A	M36			28.0	21.0					

* Custom Built products are available on request. * 特製品可依客戶需求訂製

Quick Change Tap Collets with Overload Clutch 快換式絲攻夾頭 - 扭力型

DIN 371 Type

■ Feature / 特性

· Overload Clutch is designed to prevent tap from breaking upon tapping

· 扭力型絲攻設計，可預防絲攻在攻牙時斷落

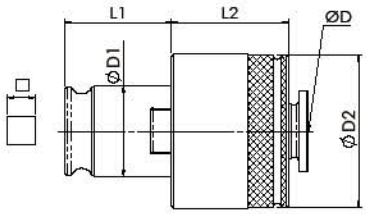

Code No. 型號	TC312 DIN371 Tap	Tap Shank 絲攻尺寸		Capacity 攻牙能力	L1 (mm)	L2 (mm)	ΦD1 (mm)	ΦD2 (mm)
		ΦD 柄徑	□四方孔					
BA352D1020101A	M1~M1.8	2.5	2.1	M3~M14	22	25	19	32
BA352D1020102A	M2~M2.5	2.8	2.1					
BA352D1030101A	M3	3.5	2.7					
BA352D1040101A	M3.5	4.0	3.0					
BA352D1040102A	M4	4.5	3.4					
BA352D1050101A	M4.5	6.0	4.9					
BA352D1050102A	M5	6.0	4.9					
BA352D1060101A	M6	6.0	4.9					
BA352D1080101A	M8	8.0	6.2					
BA352D1100101A	M10	10.0	8.0					

Code No. 型號	TC820 DIN371 Tap	Tap Shank 絲攻尺寸		Capacity 攻牙能力	L1 (mm)	L2 (mm)	ΦD1 (mm)	ΦD2 (mm)
		ΦD 柄徑	□四方孔					
BA351D1050101A	M 5	6.0	4.9	M8~M24	36	30.5	31	50
BA351D1060101A	M 6	6.0	4.9					
BA351D1080101A	M 8	8.0	6.2					
BA351D1100101A	M10	10.0	8.0					

* Custom Built products are available on request. * 特製品可依客戶需求訂製

Quick Change Tap Collets with Overload Clutch 快換式絲攻夾頭 - 扭力型

DIN 376 Type

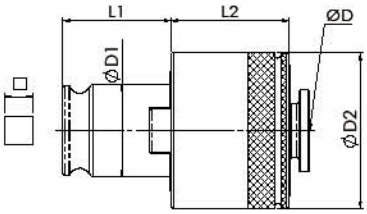

Code No. 型號	TC 312 DIN 376 Tap	Tap Shank 絲攻尺寸		Capacity 攻牙能力	L1 (mm)	L2 (mm)	ΦD1 (mm)	ΦD2 (mm)
		ΦD 柄徑	□四方孔					
BA352D6040101A	M3.5	2.5	2.1	M3~M14	22	25	19	32
BA352D6040102A	M 4	2.8	2.1					
BA352D6050101A	M4.5	3.5	2.7					
BA352D6050102A	M 5	3.5	2.7					
BA352D6060101A	M 6	4.5	3.4					
BA352D6070101A	M 7	5.5	4.3					
BA352D6080101A	M 8	6.0	4.9					
BA352D6100101A	M10	7.0	5.5					
BA352D6120101A	M12	9.0	7.0					
BA352D6140101A	M14	11.0	9.0					

Code No. 型號	TC 820 DIN 376 Tap	Tap Shank 絲攻尺寸		Capacity 攻牙能力	L1 (mm)	L2 (mm)	ΦD1 (mm)	ΦD2 (mm)
		ΦD 柄徑	□四方孔					
BA351D6080101A	M 8	6.0	4.9	M8~M24	36	30.5	31	50
BA351D6100101A	M10	7.0	5.5					
BA351D6120101A	M12	9.0	7.0					
BA351D6140101A	M14	11.0	9.0					
BA351D6160101A	M16	12.0	9.0					
BA351D6180101A	M18	14.0	11.0					
BA351D6200101A	M20	16.0	12.0					
BA351D6220101A	M22	18.0	14.5					
BA351D6240101A	M24	18.0	14.5					

Code No. 型號	TC 1433 DIN 376 Tap	Tap Shank 絲攻尺寸		Capacity 攻牙能力	L1 (mm)	L2 (mm)	ΦD1 (mm)	ΦD2 (mm)
		ΦD 柄徑	□四方孔					
BA353D6140101A	M14	11.0	9.0	M14~M36	56	41	48	72
BA353D6160101A	M16	12.0	9.0					
BA353D6180101A	M18	14.0	11.0					
BA353D6200101A	M20	16.0	12.0					
BA353D6220101A	M22	18.0	14.5					
BA353D6240101A	M24	18.0	14.5					
BA353D6270101A	M27	20.0	16.0					
BA353D6300101A	M30	22.0	18.0					
BA353D6330101A	M33	25.0	20.0					
BA353D6360101A	M36	28.0	22.0					

*Custom Built products are available on request. *特製品可依客戶需求訂製

Quick Change Tap Collets with Overload Clutch
快換式絲攻夾頭 - 扭力型
ISO 529 Type

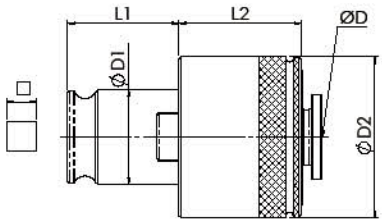

Code No. 型號	TC 312 ISO 529 Tap	Tap Shank 絲攻尺寸		Capacity 攻牙能力	L1 (mm)	L2 (mm)	ΦD1 (mm)	ΦD2 (mm)
		ΦD 柄徑	□四方孔					
BA352S5010101A	M1~M2	2.5	2.0	M3~M14	22	25	19	32
BA352S5020101A	M2.2~M2.5	2.8	2.24					
BA352S5030101A	M 3	3.15	2.5					
BA352S5040101A	M3.5	3.55	2.8					
BA352S5040102A	M 4	4.0	3.15					
BA352S5050101A	M4.5	4.5	3.55					
BA352S5050102A	M 5	5.0	4.0					
BA352S5060101A	M 6	6.3	5.0					
BA352S5070101A	M 7	7.1	5.6					
BA352S5080101A	M 8	8.0	6.3					
BA352S5090101A	M 9	9.0	7.1					
BA352S5100101A	M10	10.0	8.0					

Code No. 型號	TC 820 ISO 529 Tap	Tap Shank 絲攻尺寸		Capacity 攻牙能力	L1 (mm)	L2 (mm)	ΦD1 (mm)	ΦD2 (mm)
		ΦD 柄徑	□四方孔					
BA351S5060101A	M 6	6.3	5.0	M8~M24	36	30.5	31	50
BA351S5070101A	M 7	7.1	5.6					
BA351S5080101A	M 8	8.0	6.3					
BA351S5090101A	M 9	9.0	7.1					
BA351S5100101A	M10	10.0	8.0					

*Custom Built products are available on request. *特製品可依客戶需求訂製

Quick Change Tap Collets with Overload Clutch
快換式絲攻夾頭 - 扭力型
ISO 529/ 2283 Type

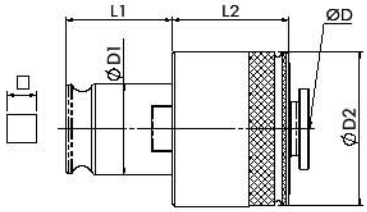

Code No. 型號	TC312 ISO 529/ 2283 Tap	Tap Shank 絲攻尺寸		Capacity 攻牙能力	L1 (mm)	L2 (mm)	ΦD1 (mm)	ΦD2 (mm)
		ΦD 柄徑	□四方孔					
BA352S2030101A	M 3	2.24	1.8	M3~M14	22	25	19	32
BA352S2040101A	M3.5	2.5	2.0					
BA352S2040102A	M 4	3.15	2.5					
BA352S2050102A	M4.5	3.55	2.8					
BA352S2050101A	M 5	4.0	3.15					
BA352S2060101A	M 6	4.5	3.55					
BA352S2070101A	M 7	5.6	4.5					
BA352S2080101A	M 8	6.3	5.0					
BA352S2090101A	M 9	7.1	5.6					
BA352S2100101A	M10	8.0	6.3					
BA352S2120101A	M12	9.0	7.1					

Code No. 型號	TC820 ISO 529/ 2283 Tap	Tap Shank 絲攻尺寸		Capacity 攻牙能力	L1 (mm)	L2 (mm)	ΦD1 (mm)	ΦD2 (mm)
		ΦD 柄徑	□四方孔					
BA351S2080101A	M 8	6.3	5.0	M8~M24	36	30.5	31	50
BA351S2330101A	M 9	7.1	5.6					
BA351S2100101A	M10	8.0	6.3					
BA351S2120101A	M12	9.0	7.1					
BA351S2140101A	M14	11.2	9.0					
BA351S2160101A	M16	12.5	10.0					
BA351S2180101A	M18	14.0	11.2					
BA351S2200101A	M20	14.0	11.2					
BA351S2220101A	M22	16.0	12.5					
BA351S2240101A	M24	18.0	14.0					

Code No. 型號	TC1433 ISO 529/ 2283 Tap	Tap Shank 絲攻尺寸		Capacity 攻牙能力	L1 (mm)	L2 (mm)	ΦD1 (mm)	ΦD2 (mm)
		ΦD 柄徑	□四方孔					
BA353S2140101A	M14	11.2	9.0	M14~M36	56	41	48	72
BA353S2160101A	M16	12.5	10.0					
BA353S2180101A	M18	14.0	11.2					
BA353S2200101A	M20	14.0	11.2					
BA353S2220101A	M22	16.0	12.5					
BA353S2240101A	M24	18.0	14.0					
BA353S2270100A	M27	20.0	16.0					
BA353S2300101A	M30	20.0	16.0					
BA353S2330101A	M33	22.4	18.0					
BA353S2360101A	M36	25.0	20.0					

*Custom Built products are available on request. *特製品可依客戶需求訂製

Quick Change Tap Collets-Rigid Type 快換式絲攻 - 剛性

JIS Type

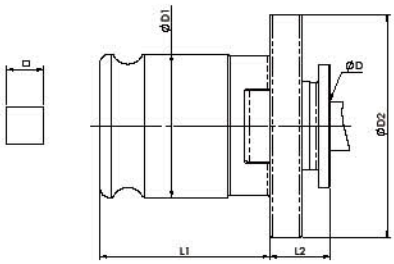

Code No. 型號	TC312B JIS Tap			Tap Shank 絲攻尺寸		Capacity 攻牙能力	L1 (mm)	L2 (mm)	ΦD1 (mm)	ΦD2 (mm)
				ΦD 柄徑	□四方孔					
BA354JS020101A	M2			3.0	2.5	M3~M14	22	7	19	30
BA354JS030101A	M3		#5,#6	4.0	3.2					
BA354JS040101A	M4	M4.5	#8	5.0	4.0					
BA354JS050101A	M5	M5.5	#10	5.5	4.5					
BA354JS060101A	M6		UNC 1/4	6.0	4.5					
BA354JS080102A			UNC 5/16	6.1	5.0					
BA354JS080101A	M8	M7		6.2	5.0					
BA354JS100101A	M10	M9	UNC 3/8	7.0	5.5					
BA354JS110101A		M11	UNC 7/16	8.0	6.0					
BA354JS120101A	M12			8.5	6.5					
BA354JS130101A			UNC 1/2	9.0	7.0					
BA354JS140101A	M14	M15	UNC 9/16	10.5	8.0					

Code No. 型號	TC820B JIS Tap			Tap Shank 絲攻尺寸		Capacity 攻牙能力	L1 (mm)	L2 (mm)	ΦD1 (mm)	ΦD2 (mm)
				ΦD 柄徑	□四方孔					
BA355JS080101A	M8	M7		6.2	5.0	M8~M24	36	11	31	48
BA355JS100101A	M10	M9	UNC 3/8	7.0	5.5					
BA355JS110101A		M11	UNC 7/16	8.0	6.0					
BA355JS120001A	M12			8.5	6.5					
BA355JS130101A			UNC 1/2	9.0	7.0					
BA355JS140101A	M14	M15	UNC 9/16	10.5	8.0					
BA355JS160101A			UNC 5/8	12.0	9.0					
BA355JS160102A	M16			12.5	10.0					
BA355JS170101A		M17		13.0	10.0					
BA355JS180101A	M18		UNC 3/4	14.0	11.0					
BA355JS200101A	M20			15.0	12.0					
BA355JS220101A	M22		UNC7/8	17.0	13.0					
BA355JS240101A	M24	M25		19.0	15.0					

Code No. 型號	TC1433B JIS Tap			Tap Shank 絲攻尺寸		Capacity 攻牙能力	L1 (mm)	L2 (mm)	ΦD1 (mm)	ΦD2 (mm)
				ΦD 柄徑	□四方孔					
BA356JS140101A	M14	M15	UNC 9/16	10.5	8.0	M14~M36	56	14	48	70
BA356JS160102A			UNC 5/8	12.0	9.0					
BA356JS160101A	M16			12.5	10.0					
BA356JS170101A		M17		13.0	10.0					
BA356JS180101A	M18		UNC 3/4	14.0	11.0					
BA356JS200101A	M20			15.0	12.0					
BA356JS220101A	M22		UNC 7/8	17.0	13.0					
BA356JS240101A	M24	M25		19.0	15.0					
BA356JS270101A	M27	M26	UNC1	20.0	15.0					
BA356JS280101A	M28			21.0	17.0					
BA356JS290101A			UNC 1 1/8	22.0	17.0					
BA356JS300101A	M30			23.0	17.0					
BA356JS320101A	M32		UNC 1 1/4	24.0	19.0					
BA356JS330101A	M33			25.0	19.0					
BA356JS350101A	M35	M34	UNC 1 3/8	26.0	21.0					
BA356JS360101A	M36			28.0	21.0					

*Custom Built products are available on request. *特製品可依客戶需求訂製

Quick Change Tap Collets-Rigid Type
快換式絲攻 - 剛性
DIN 371 Type

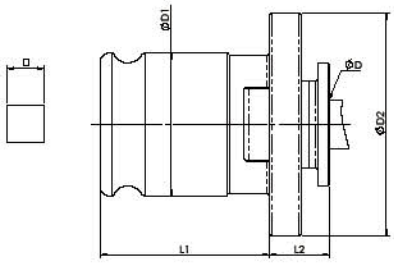

Code No. 型號	TC312B DIN371 Tap	Tap Shank 絲攻尺寸		Capacity 攻牙能力	L1 (mm)	L2 (mm)	ΦD1 (mm)	ΦD2 (mm)
		ΦD 柄徑	□四方孔					
BA354D1020101A	M1~M1.8	2.5	2.1	M3~M14	22	7	19	30
BA354D1030102A	M2~M2.5	2.8	2.1					
BA354D1030101A	M3	3.5	2.7					
BA354D1040101A	M3.5	4.0	3.0					
BA354D1040102A	M4	4.5	3.4					
BA354D1050102A	M4.5	6.0	4.9					
BA354D1050101A	M5	6.0	4.9					
BA354D1060101A	M6	6.0	4.9					
BA354D1080101A	M8	8.0	6.2					
BA354D1100101A	M10	10	8.0					

Code No. 型號	TC820B DIN371 Tap	Tap Shank 絲攻尺寸		Capacity 攻牙能力	L1 (mm)	L2 (mm)	ΦD1 (mm)	ΦD2 (mm)
		ΦD 柄徑	□四方孔					
BA355D1050102A	M4.5	6.0	4.9	M8~M24	36	11	31	48
BA355D1050101A	M5	6.0	4.9					
BA355D1060101A	M6	6.0	4.9					
BA355D1080101A	M8	8.0	6.2					
BA355D1100101A	M10	10.0	8.0					

*Custom Built products are available on request. *特製品可依客戶需求訂製

Quick Change Tap Collets-Rigid Type 快換式絲攻 - 剛性

DIN 376 Type

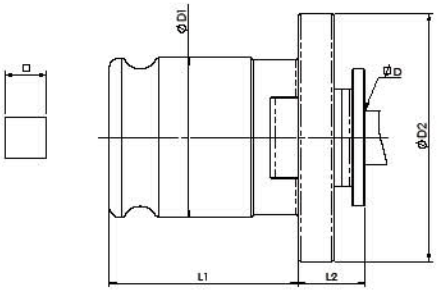

Code No. 型號	TC312B DIN376 Tap	Tap Shank 絲攻尺寸		Capacity 攻牙能力	L1 (mm)	L2 (mm)	ΦD1 (mm)	ΦD2 (mm)
		ΦD 柄徑	□四方孔					
BA354D6040101A	M3.5	2.5	2.1	M3~M14	22	7	19	30
BA354D6040102A	M4	2.8	2.1					
BA354D6050101A	M4.5	3.5	2.7					
BA354D6050102A	M5	3.5	2.7					
BA354D6060101A	M6	4.5	3.4					
BA354D6070101A	M7	5.5	4.3					
BA354D6080101A	M8	6.0	4.9					
BA354D6100101A	M10	7.0	5.5					
BA354D6120101A	M12	9.0	7.0					
BA354D6140101A	M14	11.0	9.0					

Code No. 型號	TC820B DIN376 Tap	Tap Shank 絲攻尺寸		Capacity 攻牙能力	L1 (mm)	L2 (mm)	ΦD1 (mm)	ΦD2 (mm)
		ΦD 柄徑	□四方孔					
BA355D6080101A	M8	6.0	4.9	M8~M24	36	11	31	48
BA355D6100101A	M10	7.0	5.5					
BA355D6120101A	M12	9.0	7.0					
BA355D6140101A	M14	11.0	9.0					
BA355D6160101A	M16	12.0	9.0					
BA355D6180101A	M18	14.0	11.0					
BA355D6200101A	M20	16.0	12.0					
BA355D6220101A	M22	18.0	14.5					
BA355D6240101A	M24	18.0	14.5					

Code No. 型號	TC1433B DIN376 Tap	Tap Shank 絲攻尺寸		Capacity 攻牙能力	L1 (mm)	L2 (mm)	ΦD1 (mm)	ΦD2 (mm)
		ΦD 柄徑	□四方孔					
BA356D6140101A	M14	11.0	9.0	M14~M36	56	14	48	70
BA356D6160101A	M16	12.0	9.0					
BA356D6180101A	M18	14.0	11.0					
BA356D6200101A	M20	16.0	12.0					
BA356D6220101A	M22	18.0	14.5					
BA356D6240101A	M24	18.0	14.5					
BA356D6270101A	M27	20.0	16.0					
BA356D6300101A	M30	22.0	18.0					
BA356D6330101A	M33	25.0	20.0					
BA356D6360101A	M36	28.0	22.0					

*Custom Built products are available on request. *特製品可依客戶需求訂製

Quick Change Tap Collets-Rigid Type
快換式絲攻 - 剛性
ISO 529 Type

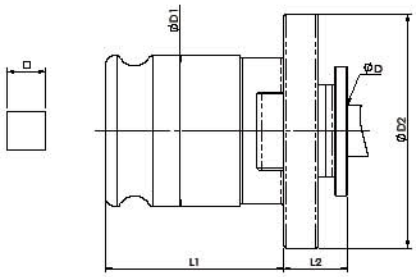

Code No. 型號	TC312B ISO 529 TAP	Tap Shank 絲攻尺寸		Capacity 攻牙能力	L1 (mm)	L2 (mm)	ΦD1 (mm)	ΦD2 (mm)
		ΦD 柄徑	□四方孔					
BA354S5020101A	M1~M2	2.5	2.0	M3~M14	22	7	19	30
BA354S5030101A	M2.2~M2.5	2.8	2.24					
BA354S5030103A	M 3	3.15	2.5					
BA354S5040102A	M3.5	3.55	2.8					
BA354S5040101A	M 4	4.0	3.15					
BA354S5050101A	M4.5	4.5	3.55					
BA354S5050102A	M 5	5.0	4.0					
BA354S5060101A	M 6	6.3	5.0					
BA354S5070101A	M 7	7.1	5.6					
BA354S5080101A	M 8	8.0	6.3					
BA354S5090101A	M 9	9.0	7.1					
BA354S5100101A	M10	10.0	8.0					

Code No. 型號	TC820B ISO 529 TAP	Tap Shank 絲攻尺寸		Capacity 攻牙能力	L1 (mm)	L2 (mm)	ΦD1 (mm)	ΦD2 (mm)
		ΦD 柄徑	□四方孔					
BA355S5060101A	M 6	6.3	5.0	M8~M24	36	11	31	48
BA355S5070101A	M 7	7.1	5.6					
BA355S5080101A	M 8	8.0	6.3					
BA355S5090101A	M 9	9.0	7.1					
BA355S5100101A	M10	10.0	8.0					

*Custom Built products are available on request. *特製品可依客戶需求訂製

Quick Change Tap Collets-Rigid Type 快換式絲攻 - 剛性

ISO 529/2283 Type

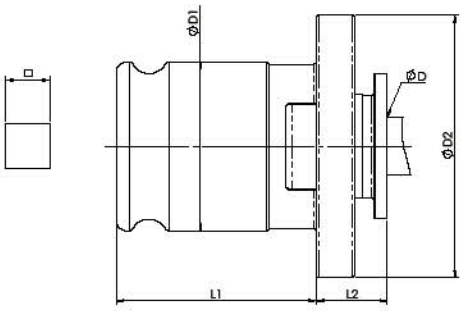

Code No. 型號	TC312B ISO 529/ 2283 Tap	Tap Shank 絲攻尺寸		Capacity 攻牙能力	L1 (mm)	L2 (mm)	ΦD1 (mm)	ΦD2 (mm)
		ΦD 柄徑	□四方孔					
BA354S2030101A	M 3	2.24	1.8	M3~M14	22	7	19	30
BA354S2040101A	M3.5	2.5	2.0					
BA354S2040102A	M 4	3.15	2.5					
BA354S2050102A	M4.5	3.55	2.8					
BA354S2050101A	M 5	4.0	3.15					
BA354S2060101A	M 6	4.5	3.55					
BA354S2070101A	M 7	5.6	4.5					
BA354S2080101A	M 8	6.3	5.0					
BA354S2090101A	M 9	7.1	5.6					
BA354S2100101A	M10	8.0	6.3					
BA354S2120101A	M12	9.0	7.1					
BA354S2140101A	M14	11.2	9.0					

Code No. 型號	TC820B ISO 529/ 2283 Tap	Tap Shank 絲攻尺寸		Capacity 攻牙能力	L1 (mm)	L2 (mm)	ΦD1 (mm)	ΦD2 (mm)
		ΦD 柄徑	□四方孔					
BA355S2080101A	M 8	6.3	5.0	M8~M24	36	11	31	48
BA355S2090101A	M 9	7.1	5.6					
BA355S2100101A	M10	8.0	6.3					
BA355S2120101A	M12	9.0	7.1					
BA355S2140101A	M14	11.2	9.0					
BA355S2160101A	M16	12.5	10.0					
BA355S2180101A	M18	14.0	11.2					
BA355S2200101A	M20	14.0	11.2					
BA355S2220101A	M22	16.0	12.5					
BA355S2240101A	M24	18.0	14.0					

Code No. 型號	TC1433B ISO 529/ 2283 Tap	Tap Shank 絲攻尺寸		Capacity 攻牙能力	L1 (mm)	L2 (mm)	ΦD1 (mm)	ΦD2 (mm)
		ΦD 柄徑	□四方孔					
BA356S2140101A	M14	11.2	9.0	M14~M36	56	14	48	70
BA356S2160101A	M16	12.5	10.0					
BA356S2180101A	M18	14.0	11.2					
BA356S2200101A	M20	14.0	11.2					
BA356S2180102A	M22	16.0	12.5					
BA356S2240101A	M24	18.0	14.0					
BA356S2270101A	M27	20.0	16.0					
BA356S2300101A	M30	20.0	16.0					
BA356S2330101A	M33	22.4	18.0					
BA356S2360101A	M36	25.0	20.0					

*Custom Built products are available on request. *特製品可依客戶需求訂製

Quick Change Tap Collets with Overload Clutch 快換式絲攻夾頭 - 扭力型

JIS Type

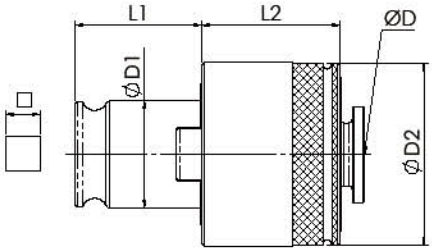

Code No. 型號	TC312 JIS Tap	Tap Shank 絲攻尺寸		Capacity 攻牙能力	L1 (mm)	L2 (mm)	ΦD1 (mm)	ΦD2 (mm)
		ΦD 柄徑	□四方孔					
BA352JS10P101A	PT 1/8	8.0	6.0	PT 1/8~PT 1/4	22	25	19	32
BA352JS14P101A	PT 1/4	11.0	9.0					

Code No. 型號	TC820 JIS Tap	Tap Shank 絲攻尺寸		Capacity 攻牙能力	L1 (mm)	L2 (mm)	ΦD1 (mm)	ΦD2 (mm)
		ΦD 柄徑	□四方孔					
BA351JS13P101A	PT 1/8	8.0	6.0	PT 1/8~PT 1/2	36	30.5	31	50
BA351JS14P101A	PT 1/4	11.0	9.0					
BA351JS18P101A	PT 3/8	14.0	11.0					
BA351JS220102A	PT 1/2	18.0	14.0					

Code No. 型號	TC1433 JIS Tap	Tap Shank 絲攻尺寸		Capacity 攻牙能力	L1 (mm)	L2 (mm)	ΦD1 (mm)	ΦD2 (mm)
		ΦD 柄徑	□四方孔					
BA353JS14P101A	PT 1/4	11.0	9.0	PT 1/4~PT 1"	56	41	48	72
BA353JS18P101A	PT 3/8	14.0	11.0					
BA353JS22P101A	PT 1/2	18.0	14.0					
BA353JS30P101A	PT 3/4	23.0	17.0					
BA353JS34P101A	PT 1	26.0	21.0					

*Custom Built products are available on request. *特製品可依客戶需求訂製

Quick Change Tap Collets-Rigid Type 快換式絲攻 - 剛性

JIS Type

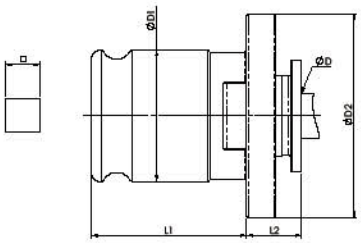

Code No. 型號	TC312B JIS Tap	Tap Shank 絲攻尺寸		Capacity 攻牙能力	L1 (mm)	L2 (mm)	ΦD1 (mm)	ΦD2 (mm)
		ΦD 柄徑	□四方孔					
BA354JS08P101A	PT 1/8	8.0	6.0	PT 1/8~PT 1/4	22	7	19	30
BA354JS14P101A	PT 1/4	11.0	9.0					

Code No. 型號	TC820B JIS Tap	Tap Shank 絲攻尺寸		Capacity 攻牙能力	L1 (mm)	L2 (mm)	ΦD1 (mm)	ΦD2 (mm)
		ΦD 柄徑	□四方孔					
BA355JS10P101A	PT 1/8	8.0	6.0	PT 1/8~PT 1/2	36	11	31	48
BA355JS14P101A	PT 1/4	11.0	9.0					
BA355JS18P101A	PT 3/8	14.0	11.0					
BA355JS22P101A	PT 1/2	18.0	14.0					

Code No. 型號	TC1433B JIS Tap	Tap Shank 絲攻尺寸		Capacity 攻牙能力	L1 (mm)	L2 (mm)	ΦD1 (mm)	ΦD2 (mm)
		ΦD 柄徑	□四方孔					
BA356JS14P101A	PT 1/4	11.0	9.0	PT 1/4~PT 1"	56	14	48	70
BA356JS18P101A	PT 3/8	14.0	11.0					
BA356JS22P101A	PT 1/2	18.0	14.0					
BA356JS30P101A	PT 3/4	23.0	17.0					
BA356JS34P101A	PT 1	26.0	21.0					

*Custom Built products are available on request. *特製品可依客戶需求訂製

Tap Chuck Reducer 絲攻轉接頭

■ Feature / 特點

The Tap Chuck Adopter Is designed for transferring variety tapping machine system. It is easy to quick change for users and apply in different system tools.

絲攻轉接頭之設計目的是為了轉換各種不同系統的絲攻機台使用者可容易快換並節省工具成本

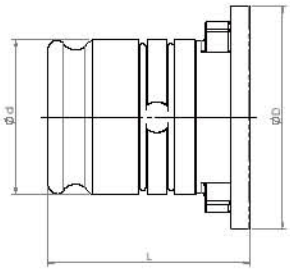

Code No. 型號	SPEC. 規格	Capacity 攻牙能力	L	ΦD1	Collets 適用筒夾	Weight(g) 重量
BA360TR020001A	TC820 → TC312	40.4	48	31	TC312/B	168
BA360TR030001A	TC1433 → TC820	62.6	69	48	TC820/B	558

*Custom Built products are available on request. * 特製品可依客戶需求訂製

*Tap collets to be ordered separately. * 絲攻夾頭需另購

Adjustable Pin Wrenches 調整板手

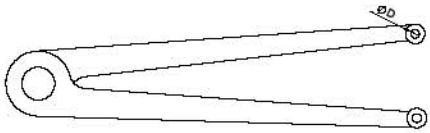

Code No. 型號	SPEC. 規格	ΦD	Collets 適用筒夾
BTSTA000101A	7-40	2.5	TC312 TC820
BTSTA000102A	11-60	4	TC1433

*Custom Built products are available on request. * 特製品可依客戶需求訂製

Universal Tap Chuck 泛用型剛性夾頭

With Inner Taper Hole 內孔型

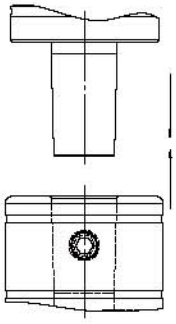

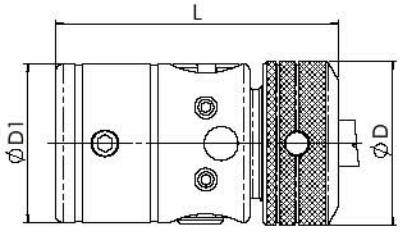

Code No. 型號	Size 尺寸	Capacity 攻牙能力		TAPER Mount No. DIN or Jacobs 錐孔組接型號	L (mm)	ΦD (mm)	ΦD1 (mm)
		mm	inch				
BA35021J90101A	1/2"	M3~M12	1/8"~1/2"	JT6	72.5	43	42
BA35021J30101A	1/2"	M3~M12	1/8"~1/2"	JT2	72.5	43	42
BA35021J40101A	1/2"	M3~M12	1/8"~1/2"	JT2S	72.5	43	42
BA35021B40102A	1/2"	M3~M12	1/8"~1/2"	B16	72.5	43	42
BA35085J50101A	5/8"	M3~M16	1/8"~5/8"	JT3	82.5	49	46
BA35085J90101A	5/8"	M3~M16	1/8"~5/8"	JT6	82.5	49	46
BA35085B60101A	5/8"	M3~M16	1/8"~5/8"	B18	82.5	49	46
BA35043J50101A	3/4"	M9~M18	3/8"~3/4"	JT3	82.5	51	49
BA35043J90101A	3/4"	M9~M18	3/8"~3/4"	JT6	82.5	51	49
BA35043B60101A	3/4"	M9~M18	3/8"~3/4"	B18	82.5	51	49

*Custom Built products are available on request. * 特製品可依客戶需求訂製

Universal Tap Chuck 泛用型剛性夾頭

Morse Taper Shank 莫氏錐度型

■ Feature / 特點

The products are suitable for CNC Machining Centers, CNC Turning Centers, High-Speed Center Lathes, Drilling Machines, Radial Drilling Machines, Air Tapping Machines, Milling Machines and other machines with reversible spindles.

此產品適用於 CNC 中心加工機， 高速車床，直立式鑽床，銑床及其它可反轉的主軸。

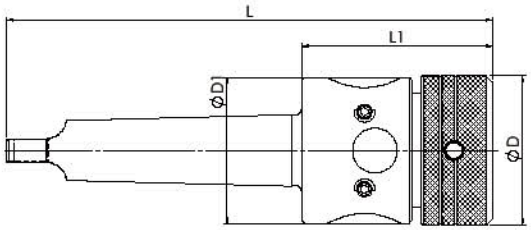

Code No. 型號	Size 尺寸	Capacity 攻牙能力		TAPER Mount No. DIN or Jacobs 錐孔組接型號	L (mm)	L1 (mm)	ΦD (mm)	ΦD1 (mm)	Weight(g) 重量
		mm	inch						
BA35021M30101A	1/2"	M3~M12	1/8"~1/2"	MT2	129	49	43	42.5	
BA35021M40101A	1/2"	M3~M12	1/8"~1/2"	MT3	148	49	43	42.5	
BA35085M30101A	5/8"	M3~M16	1/8"~5/8"	MT2	136	60	48.5	46	732
BA35085M40101A	5/8"	M3~M16	1/8"~5/8"	MT3		60	48.5	46	
BA35043M30101A	3/4"	M9~M18	3/8"~3/4"	MT2	143.5	58	51	49	924
BA35043M40101A	3/4"	M9~M18	3/8"~3/4"	MT3	162.5	58	51	49	1074
BA35043M50101A	3/4"	M9~M18	3/8"~3/4"	MT4	187.5	58	51	49	1380

*Custom Built products are available on request. * 特製品可依客戶需求訂製

Air tapping Machine 氣動攻牙機

Code No. 型號	Size 規格	Capacity 攻牙能力	Spindle R.P.M 主軸轉速	Work Place 工作範圍
BTSMB010000A	SW-0708	M8	700 R.P.M	Rmax 700mm
BTSMB020000A	SW-0712	M12	400 R.P.M	
BTSMB030000A	SW-0716	M16	250 R.P.M	
BTSMB040000A	SW-0720	M20	200R.P.M	
BTSMB050000A	SW-0722	M22	200 R.P.M	
BTSMB060000A	SW-0724	M24	100 R.P.M	
BTSMB070000A	SW-1408	M8	700 R.P.M	Rmax 1400mm
BTSMB080000A	SW-1412	M12	400 R.P.M	
BTSMB090000A	SW-1416	M16	250 R.P.M	
BTSMB100000A	SW-1420	M20	200R.P.M	
BTSMB110000A	SW-1422	M22	200 R.P.M	
BTSMB120000A	SW-1424	M24	100 R.P.M	
BTSMB130000A	SW-1608	M8	700 R.P.M	Rmax 1600mm
BTSMB140000A	SW-1612	M12	400 R.P.M	
BTSMB150000A	SW-1616	M16	250 R.P.M	
BTSMB160000A	SW-1620	M20	200R.P.M	
BTSMB170000A	SW-1622	M22	200 R.P.M	
BTSMB180000A	SW-1624	M24	100 R.P.M	
BTSMB190000A	SW-1908	M8	700 R.P.M	Rmax 1900mm
BTSMB200000A	SW-1912	M12	400 R.P.M	
BTSMB210000A	SW-1916	M16	250 R.P.M	
BTSMB220000A	SW-1920	M20	200R.P.M	
BTSMB230000A	SW-1922	M22	200 R.P.M	
BTSMB240000A	SW-1924	M24	100 R.P.M	

* Custom Built products are available on request. *特製品可依客戶需求訂製

Chum Power

Spindle Clamping System

D

主軸配件

MAS 403 PULL STUD TYPE CLAMPING

四瓣爪 MAS 403 PULL STUD TYPE CLAMPING

■ Design Features

- All the above materials are composed of alloy steel.
- The Gripper in accordance with the tool standard of MAS 403 system.
- Grippers are developed for integrated and comprise four clamping segments, which is suitable for high and low-speed turning spindles.
- The surfaces of Grippers are wear-resisting, anticorrosive and special tensile force treatment. The tensile force can bear 1,000 KG force which means 1 million times of lifetime testing circle in our each Grippers. (**ie.BT40)
- Easy to assemble and suitable for every type of spindles.
- Our Grippers adopt the rules of BERG standards.

■ 特點

- 四瓣爪材料皆以合金鋼製成
- 此四瓣爪依據 MAS 403 標準工具規範製作
- 一體式分隔爪片設計適用於各種高低轉速之主軸
- 爪片表面經耐磨耗、防腐蝕之特殊處理，拉力經循環壽命測試機測試可承受 1000Kg、100 萬次 (*BT40 為例)
- 採用易拆裝設計，適於各型系列主軸使用
- 同步採用德國 BERG 之說明規範

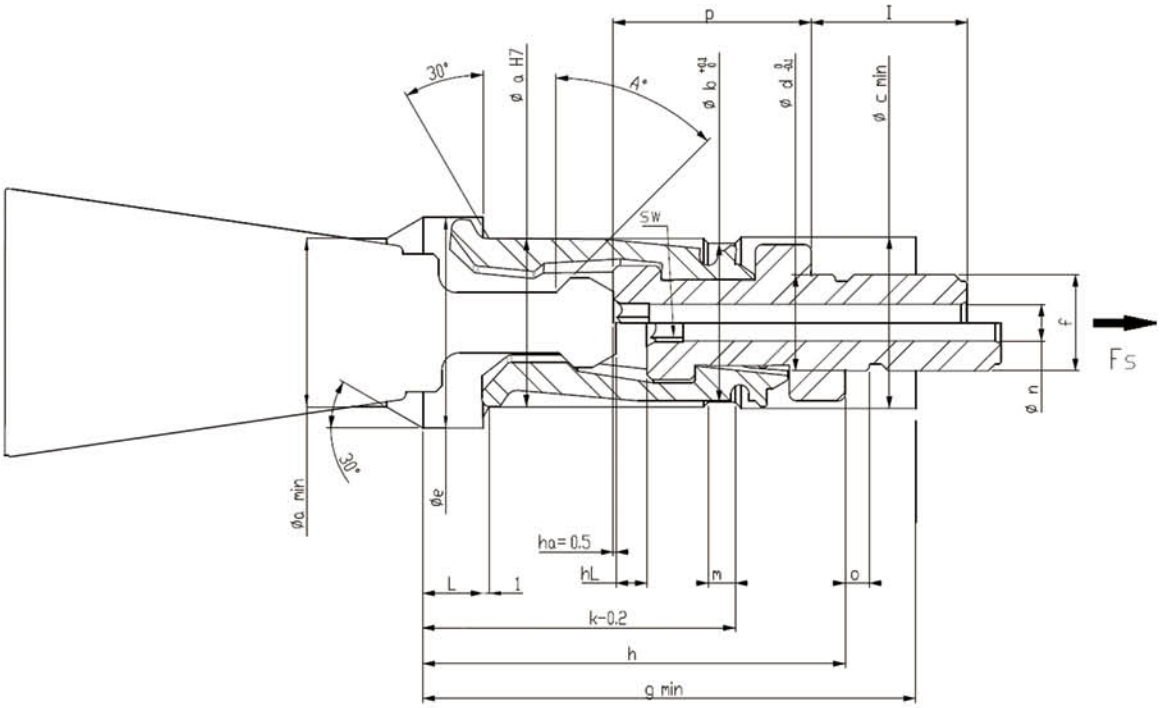

Code No. 型號	TYPE 規格	A°	a	b	c	d	e	g	h	f
BA900BGB30001A	BT30-45°	45°	19	17.8	20.2	10	24	50	47	M10xP1.5
BA900BGB30002A	BT30-60°	60°								
BA900BGB30003A	BT30-90°	90°								
BA900BGB40001A	BT40-45°	45°	28	26.4	28.5	16	35	82	70	M16xP1.5
BA900BGB40002A	BT40-60°	60°								
BA900BGB40003A	BT40-90°	90°								
BA900BGB50001A	BT50-45°	45°	43	40.4	43.5	22	54	98	90	M22xP1.5
BA900BGB50002A	BT50-60°	60°								
BA900BGB50003A	BT50-90°	90°								
BA900BGB60001A	BT60-45°	45°	62	58.6	62.5	30	77	130	125	M30xP1.5

Code No. 型號	TYPE 規格	I	k	L	m	n	o	p	hL	Fs max(kN)	MA(Nm)
BA900BGB30001A	BT30-45°	20	37	7.5	3.5	3	3	21	3	10	20
BA900BGB30002A	BT30-60°										
BA900BGB30003A	BT30-90°										
BA900BGB40001A	BT40-45°	26	52	10	4.5	6	4	33	5	18	65
BA900BGB40002A	BT40-60°										
BA900BGB40003A	BT40-90°										
BA900BGB50001A	BT50-45°	35	69	16	5	9.5	5	37	8	35	160
BA900BGB50002A	BT50-60°										
BA900BGB50003A	BT50-90°										
BA900BGB60001A	BT60-45°	40	96	23	6.5	10.3	5	58.1	10	70	450

* Fs：最大拉刀力 (Max.clamping Force)
* MA：最大鎖緊扭矩 (Max.Tighfening Torque)

CAT PULL STUD TYPE CLAMPING

四瓣爪 CAT PULL STUD TYPE CLAMPING

■ Design Features

- All the above materials are composed of alloy steel.
- The Gripper in accordance with the tool standard of ANSI system.
- Grippers are developed for integrated and comprise four clamping segments, which is suitable for high and low-speed turning spindles.
- The surfaces of Grippers are wear-resisting, anticorrosive and special tensile force treatment. The tensile force can bear 1,000 KG force which means 1 million times of lifetime testing circle in our each Grippers. (**ie. CAT40)
- Easy to assemble and suitable for every type of spindles.
- Our Grippers adopt the rules of BERG standards.

■ 特點

- 四瓣爪材料皆以合金鋼製成
- 此四瓣爪依據 ANSI 標準工具規範製作
- 一體式分隔爪片設計適用於各種高低轉速之主軸
- 爪片表面經耐磨耗、防腐蝕之特殊處理，拉力經循環壽命測試機測試可承受 1000Kg 、100 萬次 (*CAT40 為例)
- 採用易拆裝設計，適於各型系列主軸使用
- 同步採用德 BERG 之說明規範

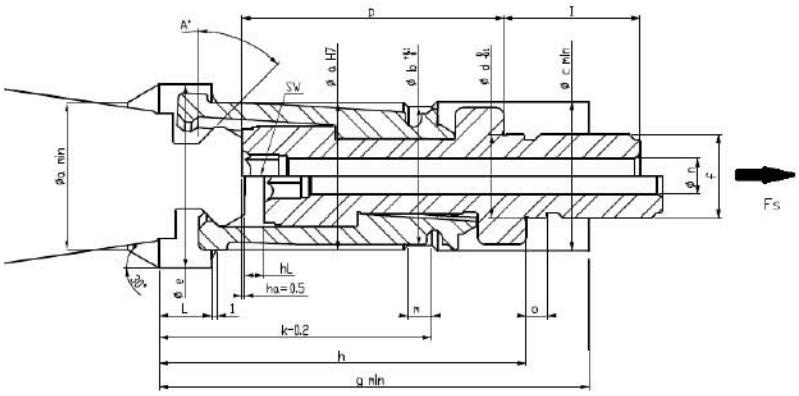

Code No. 型號	TYPE 規格	A°	a	b	c	d	e	g	h	f
BA900BGC30001A	CAT30	45°	19	17.8	19.5	10	24	50	47	M10x P1.5
BA900BGC40001A	CAT40		28	26.4	28.5	16	35	82	70	M16x P1.5
BA900BGC50001A	CAT50		43	40.4	43.5	22	54	98	90	M22x P1.5

Code No. 型號	TYPE 規格	I	k	L	m	n	o	p	hL	Fs max(kN)	MA(Nm)
BA900BGC30001A	CAT30	20	37	7.5	3.5	3	3	33	3	10	30
BA900BGC40001A	CAT40	26	52	10	4.5	7	4	50	4	18	65
BA900BGC50001A	CAT50	35	69	16	5	9.5	5	58	6.5	35	160

* Fs：最大拉刀力 (Max.clamping Force)
* MA：最大鎖緊扭矩 (Max.Tightening Torque)

DIN69872 PULL STUD TYPE CLAMPING

四瓣爪 DIN69872 PULL STUD TYPE CLAMPING

■ Design Features

- All the above materials are composed of alloy steel.
- The Gripper in accordance with the tool standard of DIN 69871/69872 system.
- Grippers are developed for integrated and comprise four clamping segments, which is suitable for high and low-speed turning spindles.
- The surfaces of Grippers are wear-resisting, anticorrosive and special tensile force treatment. The tensile force can bear 1,000 KG force which means 1 million times of lifetime testing circle in our each Grippers. (**ie. DIN40)
- Easy to assemble and suitable for every type of spindles.
- Our Grippers adopt the rules of BERG standards.

■ 特點

- 四瓣爪材料皆以合金鋼製成
- 此四瓣爪依據 DIN 69871/69872 標準工具規範製作
- 一體式分隔爪片設計適用於各種高低轉速之主軸
- 爪片表面經耐磨耗、防腐蝕之特殊處理，拉力經循環壽命測試機測試可承受 1000Kg、100 萬次 (**DIN40 為例)
- 採用易拆裝設計，適於各型系列主軸使用
- 同步採用德國 BERG 之說明規範

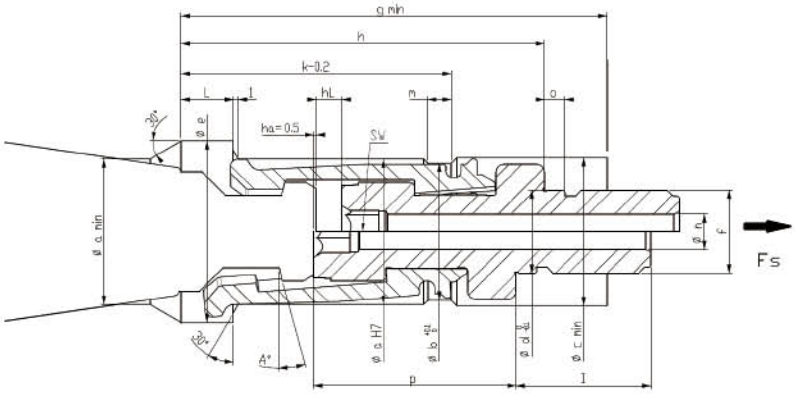

Code No. 型號	TYPE 規格	A°	a	b	c	d	e	g	h	f
BA900BGD30001A	DIN30	15°	19	17.8	20.2	10	24	50	47	M10xP1.5
BA900BGD40001A	DIN40		28	26.4	28.5	16	35	82	70	M16xP1.5
BA900BGD50001A	DIN50		43	40.4	43.5	22	54	98	90	M22xP1.5

Code No. 型號	TYPE 規格	l	k	L	m	n	o	p	hL	Fs max(kN)	MA(Nm)
BA900BGD30001A	DIN30	20	37	7.5	3.5	3	3	19.5	3.5	10	30
BA900BGD40001A	DIN40	26	52	10	4.5	7	4	39	5	18	65
BA900BGD50001A	DIN50	35	69	16	5	9.5	5	48	8	35	160

* Fs：最大拉刀力 (Max.clamping Force)
* MA：最大鎖緊扭矩 (Max.Tightening Torque)

OTT PULL STUD TYPE CLAMPING

四瓣爪 OTT PULL STUD TYPE CLAMPING

■ Design Features

- All the above materials are composed of alloy steel.
- The Gripper in accordance with the tool standard of MAS 403 system.
- Grippers are developed for integrated and comprise four clamping segments, which is suitable for high and low-speed turning spindles.
- The surfaces of Grippers are wear-resisting, anticorrosive and special tensile force treatment. The tensile force can bear 1,000 KG force which means 1 million times of lifetime testing circle in our each Grippers. (**ie.BT40)
- Easy to assemble and suitable for every type of spindles.
- Our Grippers are followed the examples of OTT standards.

■ 特點

- 四瓣爪材料皆以合金鋼製成
- 此四瓣爪依據 MAS 403 標準工具規範製作
- 一體式分隔爪片設計適用於各種高低轉速之主軸
- 爪片表面經耐磨耗、防腐蝕之特殊處理，拉力經循環壽命測試機測試可承受 1000Kg、100 萬次 (*BT40 為例)
- 採用易拆裝設計 ，適於各型系列主軸使用
- 同步採用德國 OTT 之說明規範

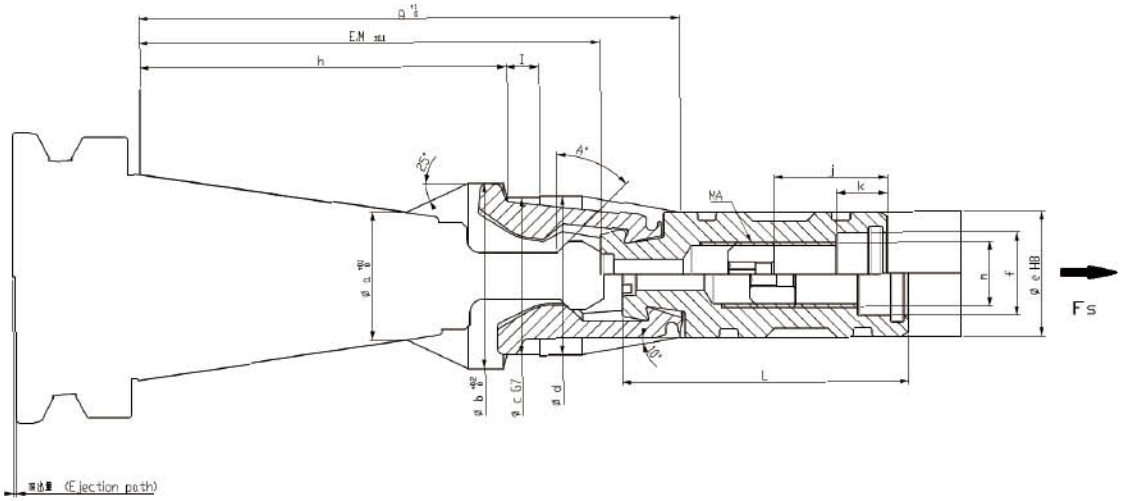

Code No. 型號	TYPE 規格	A°	a	b	c	d	e	f
BA900TTB30001A	BT30-45°	45°	19.5	27	22.5	23	19	12
BA900TTB40001A	BT40-45°	45°	27.6	40	34	34.5	27	18
BA900TTB40002A	BT40-60°	60°						
BA900TTB40003A	BT40-90°	90°						
BA900TTB50001A	BT50-45°	45°	43	56	49	49.5	40	20
BA900TTB50002A	BT50-60°	60°						
BA900TTB50003A	BT50-90°	90°						

Code No. 型號	g	h	I	j	k	L	m	Ejection path 頂出量	Fs max. (kN)	MA(Nm)
BA900TTB30001A	91	59	7	23	11	57	M10x P1.25	1	10	30
BA900TTB40001A	117	79.5	7	24.5	11	62	M14x P1.5	0.65	18	65
BA900TTB40002A										
BA900TTB40003A										
BA900TTB50001A	163	116.5	8	31.5	13	68	M16x P1.5	1	35	160
BA900TTB50002A										
BA900TTB50003A										

* Fs：最大拉刀力 (Max.clamping Force)
* MA：最大鎖緊扭矩 (Max.Tightening Torque)

OTT PULL STUD TYPE CLAMPING

四瓣爪 OTT PULL STUD TYPE CLAMPING

■ Design Features

- All the above materials are composed of alloy steel.
- The Gripper in accordance with the tool standard of ANSI system.
- Grippers are developed for integrated and comprise four clamping segments, which is suitable for high and low-speed turning spindles.
- The surfaces of Grippers are wear-resisting, anticorrosive and special tensile force treatment. The tensile force can bear 1,000 KG force which means 1 million times of lifetime testing circle in our each Grippers. (**ie.CAT40)
- Easy to assemble and suitable for every type of spindles.
- Our Grippers are followed the examples of OTT standards.

■ 特點

- 四瓣爪材料皆以合金鋼製成
- 此四瓣爪依據 ANSI 標準工具規範製作
- 一體式分隔爪片設計適用於各種高低轉速之主軸
- 爪片表面經耐磨耗、防腐蝕之特殊處理，拉力經循環壽命測試機測試可承受 1000Kg、100 萬次 (*CAT40 為例)
- 採用易拆裝設計，適於各型系列主軸使用
- 同步採用德國 OTT 之說明規範

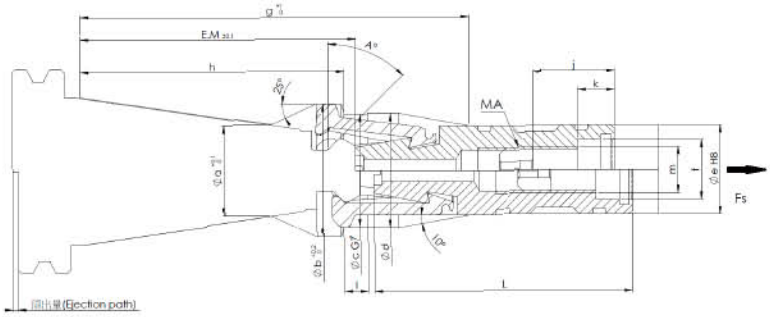

CAT

Code No. 型號	TYPE 規格	A°	a	b	c	d	e	f	g
BA900TTC30001A	CAT30	45°	19.5	27	22.5	23	19	12	91
BA900TTC40001A	CAT40		27.6	40	34	34.5	27	18	117
BA900TTC50001A	CAT50		43	56	49	49.5	40	20	163

Code No. 型號	h	i	j	k	L	m	Ejection path 頂出量	Fs max.(kN)	MA(Nm)
BA900TTC30001A	59	7	23	13	71	M10xP1.25	1.6	10	30
BA900TTC40001A	79.5	7	24.5	11	78	M14xP1.5	1.6	18	65
BA900TTC50001A	116.5	8	31.5	13	87	M16xP1.5	1	35	160

* Fs：最大拉刀力 (Max.clamping Force)
* MA：最大鎖緊扭矩 (Max.Tightening Torque)

OTT PULL STUD TYPE CLAMPING

四瓣爪 OTT PULL STUD TYPE CLAMPING

■ Design Features

- All the above materials are composed of alloy steel.
- The Gripper in accordance with the tool standard of DIN 69871 / 69872 system.
- Grippers are developed for integrated and comprise four clamping segments, which is suitable for high and low-speed turning spindles.
- The surfaces of Grippers are wear-resisting, anticorrosive and special tensile force treatment. The tensile force can bear 1,000 KG force which means 1 million times of lifetime testing circle in our each Grippers. (**ie.DIN40)
- Easy to assemble and suitable for every type of spindles.
- Our Grippers are followed the examples of OTT standards.

■ 特點

- 四瓣爪材料皆以合金鋼製成
- 此四瓣爪依據 DIN 69871 / 69872 標準工具規範製作
- 一體式分隔爪片設計適用於各種高低轉速之主軸
- 爪片表面經耐磨耗、防腐蝕之特殊處理，拉力經循環壽命測試機測試可承受 1000Kg、100 萬次 (*DIN40 為例)
- 採用易拆裝設計 ，適於各型系列主軸使用
- 同步採用德國 OTT 之說明規範

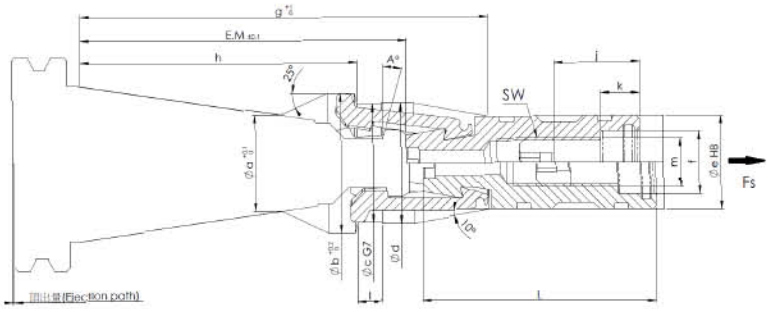

DIN

Code No. 型號	TYPE 規格	A°	a	b	c	d	e	f	g
BA900TTD30001A	DIN30	15°	19.5	27	22.5	23	19	12	91
BA900TTD40001A	DIN40		27.6	40	34	34.5	27	18	117
BA900TTD50001A	DIN50		43	56	49	49.5	40	20	163

Code No. 型號	h	i	j	k	L	m	Ejection path 頂出量	Fs max.(kN)	MA(Nm)
BA900TTD30001A	59	7	23	11	57.5	M10xP1.25	1	10	30
BA900TTD40001A	79.5	7	24.5	11	67	M14xP1.5	0.65	18	65
BA900TTD50001A	116.5	8	31.5	13	80	M16xP1.5	1	35	160

* Fs：最大拉刀力 (Max.clamping Force)
* MA：最大鎖緊扭矩 (Max.Tightening Torque)

OTT PULL STUD TYPE CLAMPING

四瓣爪 OTT ISO PULL STUD TYPE CLAMPING

■ Design Features

- All the above materials are composed of alloy steel.
- The Gripper in accordance with the tool standard of ISO system.
- Grippers are developed for integrated and comprise four clamping segments, which is suitable for high and low-speed turning spindles.
- The surfaces of Grippers are wear-resisting, anticorrosive and special tensile force treatment. The tensile force can bear 1,000 KG force which means 1 million times of lifetime testing circle in our each Grippers.
- Easy to assemble and suitable for every type of spindles.
- Our Grippers adopt the rules of OTT standards.

■ 特點

- 四瓣爪材料皆以合金鋼製成
- 此四瓣爪依據 ISO 標準工具規範製作
- 一體式分隔爪片設計適用於各種高低轉速之主軸
- 爪片表面經耐磨耗、防腐蝕之特殊處理，拉力經循環壽命測試機測試可承受 1000Kg、100 萬次採用易拆裝設計，適於各型系列主軸使用
- 採用易拆裝設計，適於各型系列主軸使用
- 同步採用德國 OTT 之說明規範

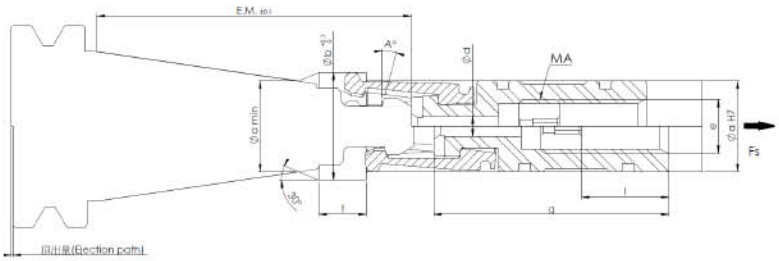

Code No. 型號	TYPE 規格	A°	a	b	c	d	e	f
BA900TTS20001A	ISO15	15°	12.5	14.5	12.5	2.5	M6xP1	5.5
BA900TTS30001A	ISO20		13.5	16	13.5	3	M8xP1.25	7
BA900TTS40002A	ISO25		14	17	14			8

Code No. 型號	g	Ejection path 頂出量	l	Fs max.(kN)	MA(Nm)
BA900TTS20001A	34	0.3	14	1.7	5
BA900TTS30001A	35	0.3	13	3	6
BA900TTS40002A	42	0.5	14	4	12

* Fs：最大拉刀力 (Max.clamping Force)
* MA：最大鎖緊扭矩 (Max.Tightening Torque)

Gripper 倍力夾爪 (S)

Force Multiplication System 倍力機構

■ Design Features

- Getting better dynamic characteristics by changing the numbers of washer and the length of spring.
- The stress of spindle is smaller at pulling operation.
- Due to anti-lock mechanism, bearing loading is reduced.
- Tool-changing speed is raised.
- Pulling force is increased and put-in force is lessened in the limited space.
- Lessening the length of pulling system and spindle, which results in the life circle of pulling system prolonged.
- Coating treatment: wear-resistance and anti-corrosion.
- It has been tested by 1.2 million times of performance test.

■ 特點

- 可減少碟形彈片的數置或彈簧長度而得到較佳的動態特性
- 拉刀時，對心軸產生應力較小
- 無需扣住心軸機構，所以對軸承負荷減少
- 提高換刀速度
- 在有限空間下，可增加其拉刀力
- 打刀力可相對減少
- 可減少拉刀系統總長度進而縮短主軸總長度
- 拉刀系統壽命的延長
- 表面經特殊鍍膜處理，耐磨耗、抗腐蝕
- 本系列產品經實機連續壽命測試 120 萬次

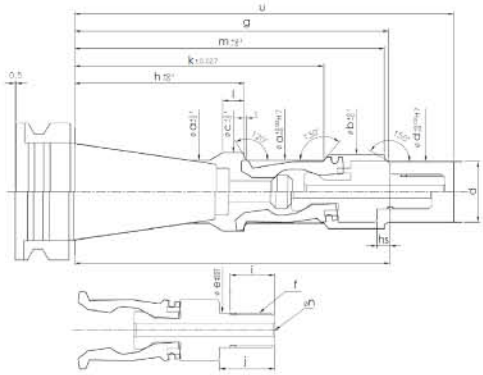

Code No. 型號	TYPE 規格	a	b	c	d	e	f	g	h	i	j	k	l	m	n	p	hs	u
BTFMS902501A	BT30-45°	20	22	24	16	10	M10xP1.5	102	56.5	13.65	17.5	80±0.027	4	100	3	96	4.5	130
BTFMS902502A	BT40-45°	29	34	36	28	16	M16xP1.5	145	78.4	20.5	25.5	115±0.027	10	143	5	145.5	6	175
BTFMS902503A	BT50-45°	44	50	54	38	22	M22xP1.5	214	117.75	27.5	35	176.75±0.032	16	209	6	224.5	9	251
BTFMS902504A	CAT40	29	34	36	28	16	M16xP1.5	145	78.4	20.5	25.5	115±0.027	10	143	5	145.5	6	175
BTFMS902505A	DIN40	29	34	36	28	16	M16xP1.5	145	78.4	20.5	25.5	115±0.027	10	143	5	145.5	6	175
BTFMS902506A	DIN50	44	50	54	38	22	M22xP1.5	214	117.75	27.5	35	176.75±0.032	16	209	6	224.5	9	251

* Fs：最大拉刀力 (Max.clamping Force)
* MA：最大鎖緊扭矩 (Max.Tightening Torque)

HSK 瓣爪
HSK Gripper

■ Design Features

· The HSK series are composed of special alloy steel.

· The surfaces of grippers are wear-resistant , anticorrosive of special treatment. 1 million times of lifetime testing circle in our each Grippers.(**ie.HSK63A)

· Our Grippers are followed the examples of OTT standard.

■ 特點

· HSK 系列爪軸、爪片使用特殊合金鋼材質製成。

· 爪軸、爪片表面經耐磨耗、防腐蝕之特殊處理，經循環壽命測試機測試可承受 100 萬次作動 (HSK63A 為例)。

· 同步採用德國 OTT 之說明規範。

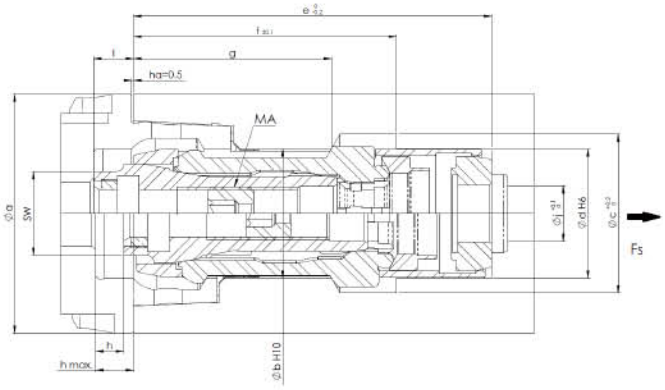

Code No. 型號	TYPE 規格	a	b	c	d	e	f	g
BA900TTH10001A	HSK32A	32	17	22.5	17	62.5	43	30
BA900TTH20001A	HSK40A	40	21	26.5	21	78	58	44
BA900TTH30001A	HSK50A	50	26	33	26	84	61	45
BA900TTH40001A	HSK63A	63	34	41.6	34	94	69	52
BA900TTH50001A	HSK100A	100	53	63	53	124	93	70

Code No. 型號	h	h max.	l	j	Fs max(kN)	MA(Nm)	SW(mm)
BA900TTH10001A	5.1	7.5	8.5	6.6	5	10	12
BA900TTH20001A	5.6	8	8.5	8.6	6.8	15	15
BA900TTH30001A	6.4	9	10.5	10.6	11	20	18
BA900TTH40001A	7.4	10	10.5	14.6	18	30	22
BA900TTH50001A	9.15	12.5	13	18.4	45	50	36

* Fs：最大拉刀力 (Max.clamping Force)
* MA：最大鎖緊扭矩 (Max.Tightening Torque)

HSK Gripper 六瓣爪

Balancing Whole Gripper for HSK Toolholder as per DIN 69893

■ Design Features

· Integrated Stucture:Easy to be installed.

· High Rigidity. High Durability.

· Special Design: High Reliability.

· Suitable for high-speed machine center. To make HSK Tool-Holders steady.

■ 特點

· 一體式結構，容易安裝。

· 剛性好，耐用。

· 特殊設計，作動可靠。

· 使用在 HSK 系列刀桿高速運轉時，平衡穩定。

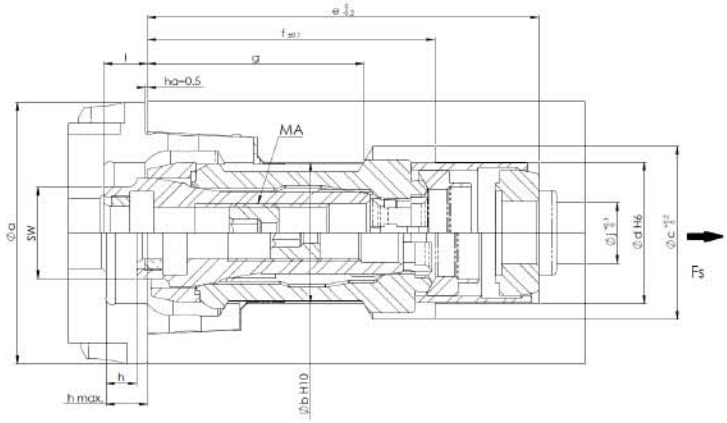

Code No. 型號	TYPE 規格	a	b	c	d	e	f	g
BA900TTH40002A	HSK63A	63	34	41.6	34	94	69	52

Code No. 型號	h	h max.	l	J	Fs max.(kN)	MA(Nm)	SW(mm)
BA900TTH40002A	7.4	10	10.5	14.6	18	30	22

* Fs：最大拉刀力 (Max.clamping Force)

* MA：最大鎖緊扭矩 (Max.Tighfening Torque)

Shaft Coupling 連軸器

■ Design Features

- According to DIN 69002 .which is suitable for multiple spindle drives.
- Developed for stub spindles
- Integrated clamping system
- Designed for main spindle drives with high speeds
- Suitable for peripheral speeds of 50 m/s and more
- Backlash-free and high precisely shaft coupling
- Easy assembly by clamping and simply screws inside

■ 特點

- 依據 DIN69002 標準製作，適用於複合加工機
- 具完備的短軸規格
- 結合完整的夾具系統
- 針對高轉速主軸設計
- 可適用於圓周回轉速 50m/s 以上
- 具高精度、動平衡結構
- 易拆裝

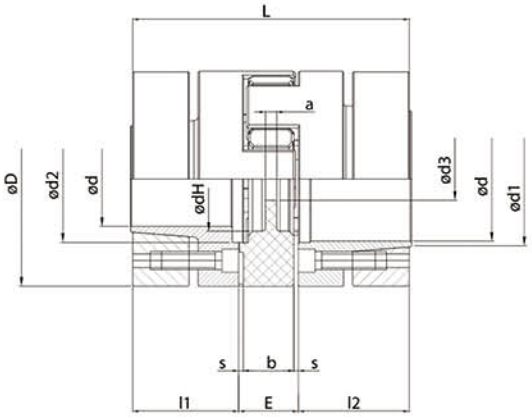

Code No. 型號	Size 尺寸	Dimensions(mm) 規格											
		d	D	dH	L	l1:l2	E	b	s	a	d1	d2	d3
BTSAA000101A	14P	14"	32	10.5	50	18.5	13	10	1.5	2	17	17	8.5
BTSAA000102A	19P37.5	16"	37.5	18	66	25	16	12	2	3	20	19	9.5
BTSAA000103A	19P	19"	40	18	66	25	16	12	2	3	23	22	9.5
BTSAA000104A	24P50	24"	50	27	78	30	18	14	2	3	28	29	12.5
BTSAA000105A	24P	25"	55	27	78	30	18	14	2	3	30	30	12.5
BTSAA000106A	28P	35"	65	30	90	35	20	15	2.5	4	40	40	14.5
BTSAA000107A	38P	40"	80	38	114	45	24	18	3	4	46	46	16.5
BTSAA000108A	42P	42"	95	46	126	50	26	20	3	4	52	55	18.5
BTSAA000109A	48P	45"	105	51	140	56	28	21	3.5	4	52	60	20.5
BTSAA000110A	55P	50"	120	60	160	65	30	22	4	4.5	55	72	22.5

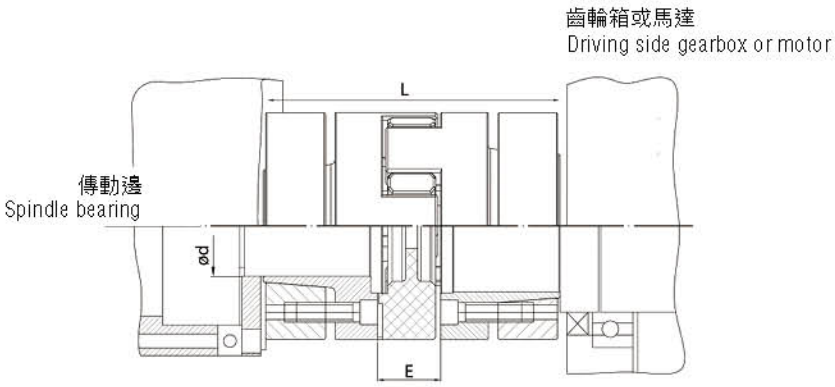

Spindle drive Size	Size	Dimensions(mm) 規格				
		d	D	l1:l2	L	E
25×20	14 P	14	32	18.5	50	13
32k×25	19 P37.5	16	37.5	25	66	16
32g×30	19 P	19	40	25	66	16
40×35	24 P50	24	50	30	78	18
50×45	24 P	25	55	30	78	18
63×55	28 P	35	65	35	90	20

Spray Nozzle Series 噴水頭系列

Press Fit Type 壓配型

The Coolant Spray Nozzle could easily adjust its direction and spray precisely. When the coolants correspond with three pressures-low, medium and high pressures, it can precisely aim at workpiece. They are suitable for CNC Machine Center, CNC Lathes, CNC Milling Machine, Grinding Machine and so on. The products can enhance the processing efficiency and accuracy. Also it is helpful for extending the lifetime of tools and decreasing the cost.

可任意調整噴水口角度，並有效對應低、中、高冷卻液液壓，正確噴向瞄準點。適用於綜合切削機、銑床、車床等 各式工具機。此項產品除可提高加工效率及精度外，亦有助於延長工具使用壽命和減少成本消耗。

FIG1

FIG2

FIG3

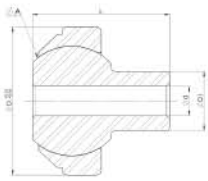

FIG4

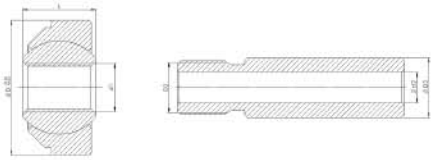

FIG5

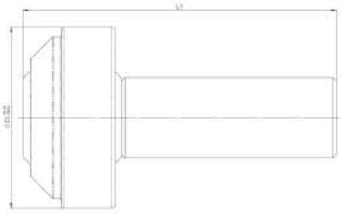

FIG6

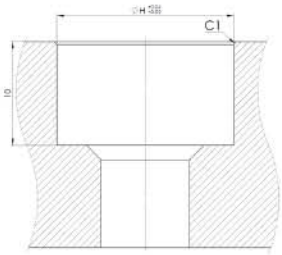

FIG7

Code No. 型號	Nominal dimensions mm 規格										Ball dia 球徑	Allowable tilting angle degree 可調整角度	FIG
	D	H	D1	D2	D3	L	L1	d	d1	d2	A	±α°	
BA90101010001A	15	15	-	-	-	8	-	-	Ø4	–	7/16"	29°	1、5
BA90101020001A	15	15	Ø6	-	-	14	–	Ø3	-	-	7/16"	29°	2、4
BA90101020002A	15	15	-	M5xP0.8	Ø6	8	23	-	M5xP0.8	2.5	7/16"	29°	3、5、6
BA90101010002A	12	12	-	-	-	7	-	-	M5xP0.8	-	9mm	28°	1、5
BA90101020003A	15	15	-	M5xP0.8	Ø6	8	19	-	M5xP0.8	2.5	7/16"	29°	3、5、6
BA90101010003A	10	10	-	-	-	5.5	-	-	M4xP0.7	-	7mm	23°	1、5
BA90101020004A	10	10	-	-	Ø4.5	5.5	17.5	-	M4xP0.7	2.3	7mm	23°	3、5、6

Spray Nozzle Series 噴水頭系列

Thread Mount Type 螺紋型

The Coolant Spray Nozzle could easily adjust its direction and spray precisely. When the coolants correspond with three pressures-low, medium and high pressures, it can improve cooling efficiency of tools. They are suitable for CNC Machine Center, CNC Lathes, CNC Milling Machine, Grinding Machine and so on. The products can enhance the processing efficiency and accuracy. Also it is helpful for extending the lifetime of tools and decreasing the cost.

可任意調整噴水口角度，並有效對應低、中、高冷卻液液壓，提昇刀具冷卻效率。適用於綜合切削機、銑床、車床等 各式工具機。此項產品除可提高加工效率及精度外，亦有助於延長工具使用壽命和減少成本消耗。

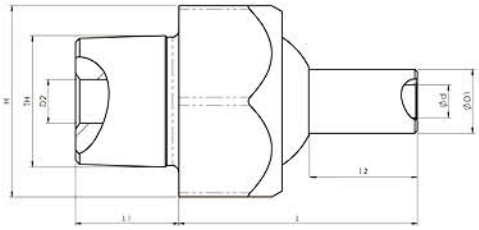

Code No. 型號	螺牙規格(TH)	L	L1	L2	D1	D2	d	H
BA90102020001A	PT1/8	20		9				
BA90102020002A	PT1/8	40	10	29	6	5	4	17
BA90102020003A	PT1/8	60		49				
BA90102020004A	PT1/4	20		9				
BA90102020005A	PT1/4	40	10	29	6	5	4	17
BA90102020006A	PT1/4	60		49				
BA90102020007A	PT3/8	30		13.6				
BA90102020008A	PT3/8	50	13	33.9	8	10	6	24
BA90102020009A	PT3/8	70		45.9				
BA90102020010A	PT1/2	40		16.5				
BA90102020011A	PT1/2	60	18	36.5	10	12	8	32
BA90102020012A	PT1/2	80		56.5				
BA90102020013A	M10xP1.25	20		9				
BA90102020014A	M10xP1.25	40	8	29	6	5	4	17
BA90102020015A	M10xP1.25	60		49				
BA90102020016A	M20xP1.5	30		13.6				
BA90102020017A	M20xP1.5	50	13	33.9	8	10	6	24
BA90102020018A	M20xP1.5	70		45.9				
BA90102020019A	M24xP2	40		16.5				
BA90102020020A	M24xP2	60	18	36.5	10	12	8	31
BA90102020021A	M24xP2	80		56.5				
BA90102020022A	NPT1/4	20		9				
BA90102020023A	NPT1/4	40	10	29	6	5	4	17
BA90102020024A	NPT1/4	60		49				
BA90102020025A	NPT3/8	30		13.6				
BA90102020026A	NPT3/8	50	13	33.9	8	10	6	24
BA90102020027A	NPT3/8	70		45.9				

Spray Nozzle Series 噴水頭系列 (Stainless Type 不銹鋼型)

Thread Mount Type 螺紋型

The Coolant Spray Nozzle could easily adjust its direction and spray precisely. When the coolants correspond with three pressures-low, medium and high pressures, it can improve cooling efficiency of tools. They are suitable for CNC Machine Center, CNC Lathes, CNC Milling Machine, Grinding Machine and so on. The products can enhance the processing efficiency and accuracy. Also it is helpful for extending the lifetime of tools and decreasing the cost.

Moreover, it is accordance with RoHS standard and passed SGS certification which avoids polluting the environment.

可任意調整噴水口角度，並有效對應低、中、高冷卻液液壓，提昇刀具冷卻效率。適用於綜合切削機、銑床、車床等各式工具機。此項產品除可提高加工效率及精度外，亦有助於延長工具使用壽命和減少成本消耗。
符合 RoHS 標準，且高過 SGS 認證，不污染環境。

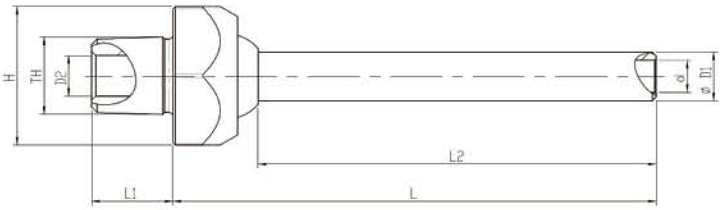

Code No. 型號	螺牙規格(TH)	L	L1	L2	D1	D2	d	H
BA90103020001A	PT1/8	20		9				
BA90103020002A	PT1/8	40	10	29	6	5	4	17
BA90103020003A	PT1/8	60		49				
BA90103020004A	PT1/4	20		9				
BA90103020005A	PT1/4	40	10	29	6	5	4	17
BA90103020006A	PT1/4	60		49				
BA90103020007A	PT3/8	30		13.6				
BA90103020008A	PT3/8	50	13	33.9	8	10	6	24
BA90103020009A	PT3/8	70		45.9				
BA90103020010A	PT1/2	40		16.5				
BA90103020011A	PT1/2	60	18	36.5	10	12	8	32
BA90103020012A	PT1/2	80		56.5				
BA90103020013A	M10xP1.25	20		9				
BA90103020014A	M10xP1.25	40	8	29	6	5	4	17
BA90103020015A	M10xP1.25	60		49				
BA90103020016A	M20xP1.5	30		13.6				
BA90103020017A	M20xP1.5	50	13	33.9	8	10	6	24
BA90103020018A	M20xP1.5	70		45.9				
BA90103020019A	M24xP2	40		16.5				
BA90103020020A	M24xP2	60	18	36.5	10	12	8	31
BA90103020021A	M24xP2	80		56.5				
BA90103020022A	NPT1/4	20		9				
BA90103020023A	NPT1/4	40	10	29	6	5	4	17
BA90103020024A	NPT1/4	60		49				
BA90103020025A	NPT3/8	30		13.6				
BA90103020026A	NPT3/8	50	13	33.9	8	10	6	24
BA90103020027A	NPT3/8	70		45.9				

Spray Nozzle Series 噴水頭系列

Leak Lock Type 止漏型

Special design for avoiding oil leaking. Not delaying spraying fluid which prolongs the longevity of the tool holders. Slope angle: ±35° . The angle is easy to adjust by hand. Easy operation and greatest stability when operating. We have Multiple sizes for your reference. Customer requested sizes are available. Leak lock spray nozzle is made by stainless steel. It extends the lifetime of the tools and avoids corrosion. Moreover, it is accordance with RoHS standard and passed SGS certification which avoids polluting the environment. We have self-made testing equipment and QC before delivery. With our quality assurance, you can have confidence in us.

特殊設計可立即停止供給切削液，將不再有切削油滴漏的困擾。且出水不延遲，可延長刀具使用壽命。傾斜角度：±35° ，以手即輕易調整至您希望的角度，容易操作使用且穩定性佳。規格齊全供您選擇，並可依客戶需求訂作。亦有不銹鋼材質的噴水頭，可延長產品壽命，防止生銹。且通過 SGS 認證，符合 RoHS 標準，不污染環境。擁有自製的檢驗設備，出貨前一律全檢，讓您對品質更安心。

Alloy Steel Type
合金鋼型

Stainless Type
不銹鋼型

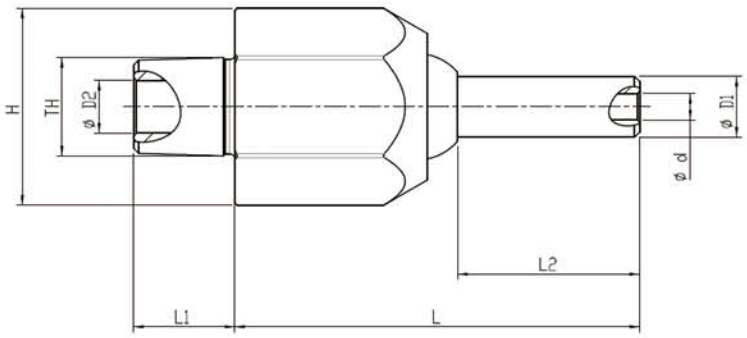

Alloy Steel Type **合金鋼型**

Code No. 型號	螺牙規格 (TH)	L	L1	L2	D1	D2	d	H
BA90104020001A	PT1/8	40	10	18	6	6	4	17
BA90104020002A	PT1/8	60		38				
BA90104020003A	PT1/4	40		18				
BA90104020004A	PT1/4	60		38				
BA90104020005A	PT3/8	30	13	5.9	8	10	6	24
BA90104020006A	PT3/8	50		25.9				
BA90104020007A	PT3/8	70		45.9				
BA90104020008A	NPT1/4	40	10	18	6	6	4	17
BA90104020009A	NPT1/4	60		38				
BA90104020010A	NPT3/8	30	13	5.9	8	10	6	24
BA90104020011A	NPT3/8	50		25.9				
BA90104020012A	NPT3/8	70		45.9				
BA90104020013A	M10×P1.25	40	10	18	6	6	4	17
BA90104020014A	M10×P1.25	60		38				
BA90104020015A	M20×P1.5	30	13	5.9	8	10	6	24
BA90104020016A	M20×P1.5	50		25.9				
BA90104020017A	M20×P1.5	70		45.9				

Stainless Type **不銹鋼型**

Code No. 型號	螺牙規格 (TH)	L	L1	L2	D1	D2	d	H
BA90105020001A	PT1/8	40	10	18	6	6	4	17
BA90105020002A	PT1/8	60		38				
BA90105020003A	PT1/4	40		18				
BA90105020004A	PT1/4	60		38				
BA90105020005A	PT3/8	30	13	5.9	8	10	6	24
BA90105020006A	PT3/8	50		25.9				
BA90105020007A	PT3/8	70		45.9				
BA90105020008A	NPT1/4	40	10	18	6	6	4	17
BA90105020009A	NPT1/4	60		38				
BA90105020010A	NPT3/8	30	13	5.9	8	10	6	24
BA90105020011A	NPT3/8	50		25.9				
BA90105020012A	NPT3/8	70		45.9				
BA90105020013A	M10×P1.25	40	10	18	6	6	4	17
BA90105020014A	M10×P1.25	60		38				
BA90105020015A	M20×P1.5	30	13	5.9	8	10	6	24
BA90105020016A	M20×P1.5	50		25.9				
BA90105020017A	M20×P1.5	70		45.9				

Spray Nozzle Series 噴水頭系列

Plastic Type 塑材型

The Coolant Spray Nozzle could easily adjust its direction and spray precisely. When the coolants correspond with three pressures-low, medium and high pressures, it can improve cooling efficiency of tools. They are suitable for CNC Machine Center, CNC Lathes, CNC Milling Machine, Grinding Machine and so on. The products can enhance the processing efficiency and accuracy. Also it is helpful for extending the lifetime of tools and decreasing the cost.

可任意調整噴水口角度，並有效對應低、中、高冷卻液液壓，提昇刀具冷卻效率。適用於綜合切削機、銑床、車床等各式工具機。此項產品除可提高加工效率及精度外，亦有助於延長工具使用壽命和減少成本消耗。

FIG1

FIG2

FIG3

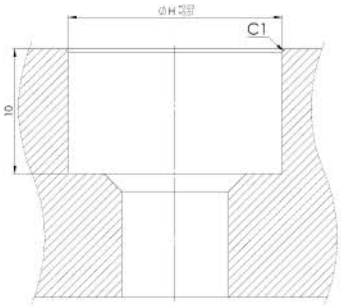

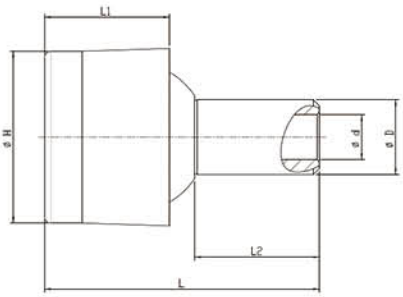

Code No. 型號	ΦH	L	L1	L2	D	d	FIG.
BA90106010001A	10	-	7	-	-	3	1
BA90106010002A	12	-	8	-	-	M5 x P0.8	1
BA90106010003A	14	-	10	-	-	M6 x P1.0	1
BA90106010004A	16	-	11	-	-	M7 x P1.0	1
BA90106020001A	14	17	10	5	6	3	2
BA90106020002A	12	15	8	5.4	5	3	2
BA90106020003A	12	19	8	9.3	5	3	3
BA90106020004A	14	22	10	10	5	3.8	3
BA90106020005A	16	25.5	11	12.5	7	4.4	3

EZ-BAR

LASER COOLANT POINTER 雷射導水筆

■ Introduction & Features

- The Laser Coolant Pointer is designed for the machines where you need to adjust the coolant Spray Nozzles of the spindle.
- The main purpose is for the operator to correct the angle of coolant water and to prevent the operator from being sprayed by the coolant water. Leading by the laser coolant pointer can be adaptable for every kinds of cutting process (as Fig.1 and Fig.2).
- At the same time, it can improve the trouble of occupying too much space for the traditional adjustable coolant system hoses.

■ 特點

- 雷射導水筆搭配主軸噴水頭即能簡便地校正冷卻水柱與刀具散熱點的角度。
- 雷射導水筆的導引與主軸噴水頭的配合，適用於工具機上的各種切削加工，（如圖 1、圖 2) 並且有助於減少使用者與切削水直接接觸。
- 同時此項產品的設計亦可有效解決傳統噴水軟管占空間的困擾。

Fig.1. Drilling 鑽孔

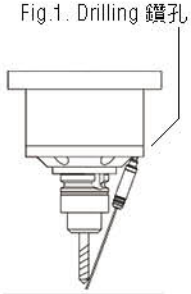

Fig.2. Face Milling 面銑

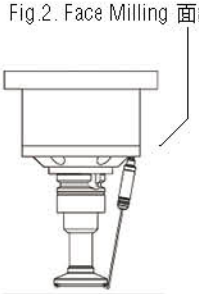

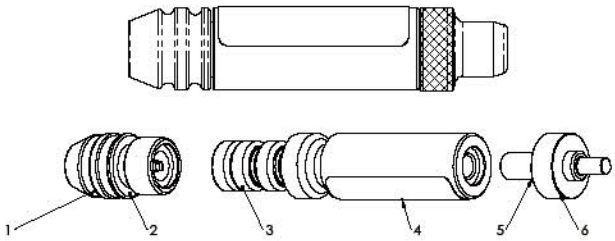

Fig.3. Exploded drawing 分解圖

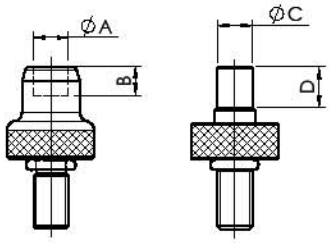

Fig.4. Adapter Spec 分調整接桿規格

Name of each parts (Fig. 3)

1. Laser Head
2. Big O-Ring
3. Battery
4. Body
5. Small O-Ring
6. Adjust Link Stick

各部位名稱 (圖 3)

1. 雷射頭
2. 大 O 型環
3. 電池
4. 本體
5. 小 O 型環
6. 調整接桿

The Code No. & Spec. of the Adjust Link Stick (Fig.4)
調整接桿編號與規格，如下表及圖 4 所示

Code No. 型號	Spec.			
BA903LS000001A	ΦA	Φ B	ΦC	D
BE903LS09A	6 mm	5mm	-	-
BE903LS10A	-	-	4mm	7mm
BE903LS11A	-	-	5mm	7mm
BE903LS12A	-	-	6mm	7mm

Installations & Attentions

※Please confirm the following steps before installing：

- Please confirm the neck of Laser Head & Adjust Link Stick shall wear the Big O-Ring & Small O-Ring to avoid infiltrating the water.
- The negative of battery shall be headed forward the Laser Head.
- The inner of the Body shall insert the plastic cushion to avoid the results of short circuit in the negative of battery & Body.

※Installation：

- After you confirmed as above, you can assemble the all parts according to Fig.3.

安裝步驟與注意事項

※ 安裝前請確認

- 為避免滲水，請確認雷射頭與調整接桿之頸部套有大 O 型環及小 O 型環。
- 電池負極需朝向雷射頭。
- 本體內部嵌入塑膠墊片，用以避免電池負極與本體造成短路。

※ 安裝

- 確認工作完畢後，依照圖 3 爆炸圖順序裝入即可。

Attentions on Usage & Maintenance

- After correcting the position of the Fountain Outlet, please screw out the Adjust Link Stick slightly. It'll avoid the unnecessary consumption for electric power.
- To check the cleanness of the lens of Laser Head as regular. If it is dirty, you can wipe it with the cotton bud.
- To check the O-Ring as regular, if it keeps the elasticity and without transfiguration to avoid infiltrating the water.
- You may not aim to your eyes by 650nm Diode Laser. Otherwise, it'll hurt your retina.

使用與保養注意事項

- 當調整接桿完全旋入本體時，雷射導水筆處於開啓的狀態。
- 噴水口角度位置校正結束後，請將調整接桿略為旋出，避免電量消耗。
- 定期檢查雷射頭鏡面之清潔，骯髒時可使用棉花棒進行擦拭。
- 定期檢查 O 型環是否保持彈性及變形，以避免滲水。
- 不可將紅外線二極體雷射對準眼睛，以避免傷害到視網膜。

Chum Power

Tooling System

刀桿系統

E

BT CHU CNC DRILL CHUCK

BT直結式鑽夾頭　BT Shank JIS B 6339 (MAS 403 BT)

■ Application / 產品適用

· The product can be adapted for the general lathe or the drilling processing whose machines center can supply with BT spindle.

· 適用於傳統銑床或其他提供 BT 主軸介面 之工作母機作鑽孔加工。

■ Feature / 特點

· 3 times better clamping capacity, comparing to keyed drill chucks.

· The drill bit won't be loosen or falling off.

· Twice precision than the keyed drill chucks.

· The drill chuck is interchangeable.

· 比普通夾頭多 3 倍的夾持力。

· 鑽頭不會鬆脫或掉落。

· 比普通夾頭多出 2 倍精準。

· 可替換式的夾頭。

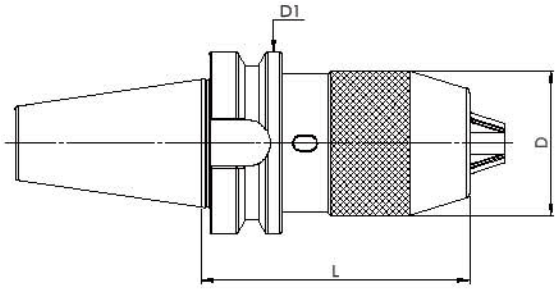

Code No. 型號	TYPE 規格	L	D	D1	Spanner No. 扳手編號
BA2BT30042075A	BT30×CHU8 - 75	75	37	46	BA12808000001A
BA2BT30043090A	BT30×CHU13-90	90	50		BA12813000001A
BA2BT40042085A	BT40×CHU8 - 85	85	37	63	BA12808000001A
BA2BT40043095A	BT40×CHU13-95	95	50		BA12813000001A
BA2BT40044120A	BT40×CHU16-120	120	57		BA12816000001A
BA2BT50043110A	BT50×CHU13 - 110	110	50	100	BA12813000001A
BA2BT50044110A	BT50×CHU16-110	110	57		BA12816000001A

* Custom built products are available on request.

BT ER COLLET CHUCK

BT刀把ER立銑式　BT Shank JIS B 6339 (MAS 403 BT) with Collet Chuck DIN 6499

■ Application / 產品適用

· The product can be applied for end mills, drill bits, drill reamers, taps, and can clamp any straight cutters and tools.

· 本產品可應用於銑刀，鑽頭，鉸刀，絲攻及可夾持任何直柄的刀具及工具。

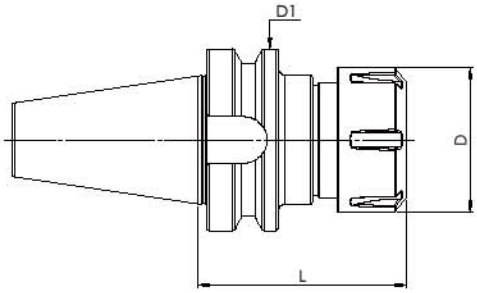

Code No. 型號	TYPE 規格	L	D	D1	Spanner No. 扳手編號
BA2BT30022060A	BT30×ER11 - 60	60	19	46	BA2ER11020001A
BA2BT30023060A	BT30×ER16 - 60	60	28		BA2ER16020001A
BA2BT30023100A	BT30×ER16 - 100	100			
BA2BT30024060A	BT30×ER20 - 60	60	34		BA2ER20020001A
BA2BT30024100A	BT30×ER20 - 100	100			
BA2BT30105060A	BT30×ER25 - 60	60	42		BA2ER25100001A
BA2BT30105100A	BT30×ER25 - 100	100			
BA2BT30106070A	BT30×ER32 - 70	70	50		BA2ER32100001A
BA2BT30106100A	BT30×ER32 - 100	100			
BA2BT40022070A	BT40×ER11 - 70	70	19	63	BA2ER11020001A
BA2BT40022100A	BT40×ER11 - 100	100			
BA2BT40023070A	BT40×ER16 - 70	70	28		BA2ER16020001A
BA2BT40023100A	BT40×ER16 - 100	100			
BA2BT40024070A	BT40×ER20 - 70	70	34		BA2ER20020001A
BA2BT40024100A	BT40×ER20 - 100	100			
BA2BT40105070A	BT40×ER25 - 70	70	42		BA2ER25100001A
BA2BT40105100A	BT40×ER25-100	100			
BA2BT40106070A	BT40×ER32 - 70	70	50		BA2ER32100001A
BA2BT40106100A	BT40×ER32 - 100	100			
BA2BT40107070A	BT40×ER40 - 70	70	63		BA2ER40100001A
BA2BT40107100A	BT40×ER40 - 100	100			
BA2BT40108090A	BT40×ER50 - 90	90	78		BA2ER50100001A
BA2BT40108100A	BT40×ER50 - 100	100			

* Custom built products are available on request.

BT ER COLLET CHUCK

BT 刀把 ER立銑式　BT Shank JIS B 6339 (MAS 403 BT) with Collet Chuck DIN 6499

■ Application / 產品適用

· The product can be applied for end mills, drill bits, drill reamers, taps, and can clamp any straight cutters and tools.

· 本產品可應用於銑刀，鑽頭，鉸刀，絲攻及可夾持任何直柄的刀具及工具。

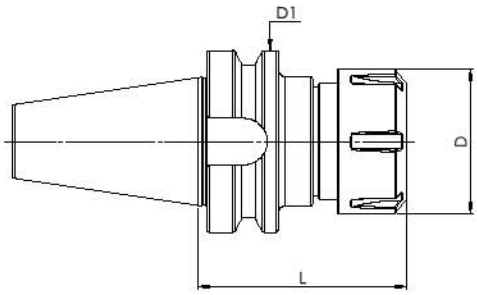

Code No. 型號	TYPE 規格	L	D	D1	Spanner No. 扳手編號
BA2BT50023070A	BT50×ER16 - 70	70	28	100	BA2ER16020001A BA2ER20020001A
BA2BT50023100A	BT50×ER16 - 100	100			
BA2BT50024070A	BT50×ER20 - 70	70	34		
BA2BT50024105A	BT50×ER20 - 105	105			
BA2BT50105070A	BT50×ER25 - 70	70	42		BA2ER20020001A
BA2BT50105105A	BT50×ER25 - 105	105			
BA2BT50106080A	BT50×ER32 - 80	80	50		BA2ER32100001A
BA2BT50106100A	BT50×ER32 - 100	100			
BA2BT50107080A	BT50×ER40 - 80	80	63		BA2ER40100001A
BA2BT50108100A	BT50×ER50 - 100	100	78		BA2ER50100001A
BA2BT50108120A	BT50×ER50 - 120	120			

* Custom built products are available on request.

BT MILLING CHUCK

BT 強力式立銑刀把　BT Shank JIS B 6339 (MAS 403 BT)

■ Application / 產品適用

· The Milling chuck can be applied for heavy-duty & higher accuracy cutting.

· 此強力銑刀把適用重型及高精密切削。

■ Feature / 特點

· It is designed with inner rolling needles inside. This design can reduce the friction resistance when tightening and the wear of parts.

· The design of dustproof can prevent iron scrap dropping and extend longevity of chuck.

· The high clamping force is available. The product can prevent the cutting tools from slipping when the users worked it and increase the longevity of cutting tools.

· High rigidity　· High precision

· 內部滾針設計，可減少鎖緊時之摩阻力及零件磨耗。

· 防塵設計減少鐵屑掉入以延長使用壽命。

· 高夾持力，防止刀具於加工時滑脫，增加刀具壽命。

· 高剛性　· 高精密

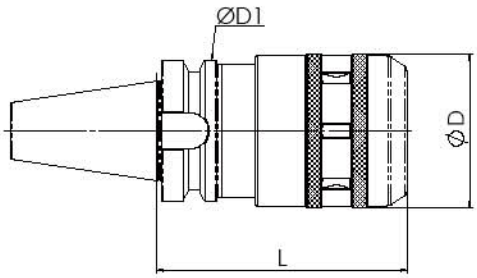

Code No. 型號	TYPE 規格	L	D	D1	Spanner No. 扳手編號
BA2BT30032001A	BT30×C20- 80	80	52	46	BA20C20030001A
BA2BT30032501A	BT30×C25- 85	85	60		BA20C25030001A
BA2BT40032001A	BT40×C20- 85	85	52	63	BA20C20030001A
BA2BT40032002A	BT40×C20- 100	100			
BA2BT40032003A	BT40×C20- 135	135			
BA2BT40032501A	BT40×C25- 90	90	60		BA20C25030001A
BA2BT40032502A	BT40×C25- 135	135			
BA2BT40033202A	BT40×C32- 105	105	69		BA20C32030001A
BA2BT40033203A	BT40×C32- 135	135			
BA2BT50032001A	BT50×C20- 105	105	52	100	BA20C20030001A
BA2BT50032002A	BT50×C20- 150	150			
BA2BT50032501A	BT50×C25- 100	100	60		BA20C25030001A
BA2BT50032502A	BT50×025- 150	150			
BA2BT50033201A	BT50×C32- 110	110	69		BA20C32030001A
BA2BT50033202A	BT50×C32- 135	135			
BA2BT50034201A	BT50×C42- 110	110	86		BA20C42030001A
BA2BT50034203A	BT50×C42- 135	135			

* Custom built products are available on request.

BT CHUCK For High-Speed Machining

BT高速刀桿-高速加工專用

■ Application / 產品適用

· To prevent vibration and reduces noise by SK Nut(Notch-Free).

· High Rigidity · High Accuracy · High Clamping Force

· 藉由 SK 螺母 (無溝槽)，可避免加工時的晃動及降低噪音。

· 高剛性 · 高精度 · 高夾持力

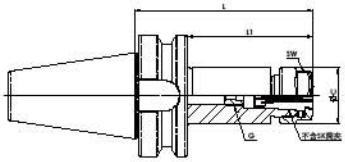

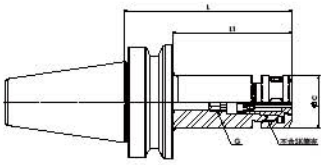

Code No. 型號	TYPE 規格	L	L1	ΦC	SW	G	Collet
BA2BT30251060A	BT30-SK 6- 60	60	38	19.7	18	M6	SK6
BA2BT30251090A	BT30-SK 6- 90	90	68				
BA2BT30252060A	BT30-SK10- 60	60	38	29	25	M10	SK10
BA2BT30252090A	BT30-SK10- 90	90	68				
BA2BT30254060A	BT30-SK16- 60	60	38	40	36	M18	SK16
BA2BT30254090A	BT30-SK16- 90	90	68				
BA2BT30255060A	BT30-SK20- 60	60	38	48.5	-	M22	SK20
BA2BT30256060A	BT30-SK25- 90	90	68	55	-	M28	SK25
BA2BT40251060A	BT40-SK 6- 60	60	33	19.7	18	M6	SK6
BA2BT40251090A	BT40-SK 6- 90	90	63				
BA2BT40251120A	BT40-SK 6- 120	120	93				
BA2BT40252060A	BT40-SK10- 60	60	33	29	25	M10	SK10
BA2BT40252090A	BT40-SK10- 90	90	63				
BA2BT40252120A	BT40-SK10-120	120	93				
BA2BT40252150A	BT40-SK10-150	150	123				
BA2BT40254060A	BT40-SK16- 60	60	33	40	36	M18	SK16
BA2BT40254090A	BT40-SK16- 90	90	63				
BA2BT40254105A	BT40-SK16- 105	105	78				
BA2BT40254120A	BT40-SK16- 120	120	93				
BA2BT40254135A	BT40-SK16- 135	135	108				
BA2BT40254150A	BT40-SK16- 150	150	123				
BA2BT40254190A	BT40-SK16- 190	190	163				
BA2BT40255060A	BT40-SK20- 60	60	33	48.5	-	M22	SK20
BA2BT40255090A	BT40-SK20- 90	90	63				
BA2BT40255120A	BT40-SK20- 120	120	93				
BA2BT40255150A	BT40-SK20- 150	150	123				
BA2BT40256080A	BT40-SK25- 90	90	63	55	-	M28	SK25
BA2BT40256120A	BT40-SK25- 120	120	93				
BA2BT50251100A	BT50-SK 6-100	100	62	19.7	18	M6	SK6
BA2BT50251150A	BT50-SK 6-150	150	112				
BA2BT50252100A	BT50-SK10-100	100	62	29	25	M10	SK10
BA2BT50252150A	BT50-SK10-150	150	112				
BA2BT50254100A	BT50-SK16-100	100	62	40	36	M18	SK16
BA2BT50254150A	BT50-SK16-150	150	112				
BA2BT50254200A	BT50-SK16-200	200	62				
BA2BT50255100A	BT50-SK20-100	100	112	48.5	-	M22	SK20
BA2BT50255150A	BT50-SK20-150	150	62				
BA2BT50255200A	BT50-SK20-200	200	112				
BA2BT50256100A	BT50-SK25-100	100	62	55	-	M28	SK25
BA2BT50256150A	BT50-SK25-150	150	112				
BA2BT50256200A	BT50-SK25-200	200	162				

* Custom built products are available on request. (BT, HSK, SK, NT, CAT Type) * 特製品可依客戶需求訂製

* 螺帽與扳手選配參考 (P.109 頁) * 筒夾選配參考 (P.103)

Hydraulic Tool-Holder
油壓刀桿

■ Application / 產品適用

- Reliable for clamping reiteration.
- High Rigidity.
- High Accuracy; No Collet used.
- High Clamping Force.
- Our hydraulic chuck can obtain the run-out within 3μm (T.I.R.) at the position 2.5*d1 from the nose.
- 重複夾持可靠。
- 高剛性。
- 高精度，因不需使用筒夾。
- 高夾持力。
- 在使用 2.5*d1 倍長時，精度為 0.003μm。

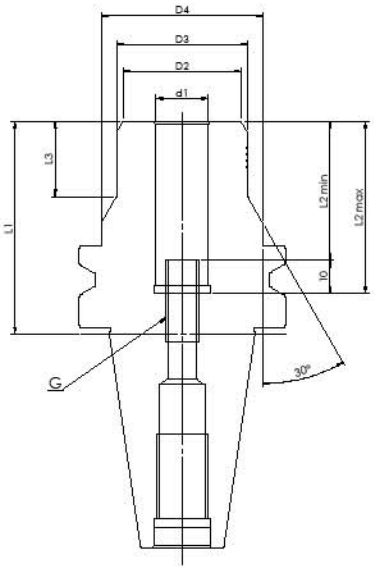

Code No. 型號	TYPE 規格	d1	D2	D3	D4	L1	L2		L3	G
							Min	Max		
BA2BT40080065A	BT40×CHY6-65	6	26	29	49.5	65	27.5	37.5	23	M5
BA2BT40081065A	BT40×CHY8-65	8	27	30		65	27.5	37.5	23	M6
BA2BT40082065A	BT40×CHY10-65	10	29	32		65	32.5	42.5	23	M8×1
BA2BT40083065A	BT40×CHY 12-65	12	31	34		65	37.5	47.5	23	M8×1
BA2BT40084065A	BT40×CHY14-65	14	33	36		65	37.5	47.5	23	M10×1
BA2BT40085065A	BT40×CHY 16-65	16	36	40		65	42.5	52.5	23	M10×1
BA2BT40086065A	BT40×CHY18-65	18	38	42		65	42.5	52.5	23	M10×1
BA2BT40087065A	BT40×CHY20-65	20	40	44		65	42.5	52.5	23	M10×1
BA2BT40088100A	BT40×CHY25-100	25	55	60	-	100	51	61	-	M16×1
BA2BT40089105A	BT40×CHY32-105	32	58	63		105	55	61	-	M16×1

* Custom built products are available on request. (BT, HSK, SK, NT, CAT Type) *特製品可依客戶需求訂製

Hydraulic Tool-Holder
油壓刀桿

■ Application / 產品適用

- Reliable for clamping reiteration.
- High Rigidity.
- High Accuracy; No Collet used.
- High Clamping Force.
- Our hydraulic chuck can obtain the run-out within 3μm (T.I.R.) at the position 2.5*d1 from the nose.
- 重複夾持可靠。
- 高剛性。
- 高精度，因不需使用筒夾。
- 高夾持力。
- 在使用 2.5*d1 倍長時，精度為 0.003μm。

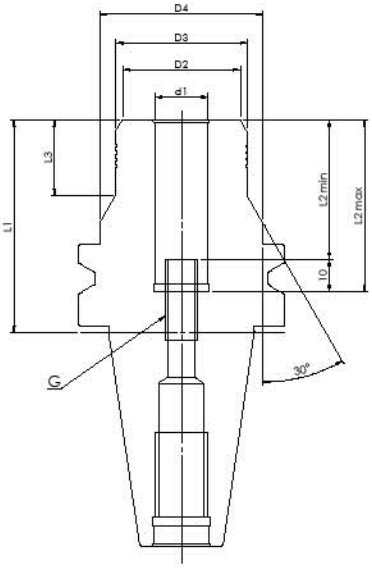

Code No. 型號	TYPE 規格	d1	D2	D3	D4	L1	L2		V	L3	G
							Min	Max			
BA2BT50080090A	BT50×CHY6-90	6	26	29	49.5	90	37.5	27.5	10	30	M5
BA2BT50081090A	BT50×CHY8-90	8	27	30		90	37.5	27.5	10	30	M6
BA2BT50082090A	BT50×CHY10-90	10	29	32		90	42.5	32.5	10	30	M8×1
BA2BT50083090A	BT50×CHY12-90	12	31	34		90	47.5	37.5	10	30	M8×1
BA2BT50084090A	BT50×CHY14-90	14	33	36	63	90	47.5	37.5	10	30	M10×1
BA2BT50085090A	BT50×CHY16-90	16	36	40		90	52.5	42.5	10	30	M10×1
BA2BT50086090A	BT50×CHY18-90	18	38	42		90	52.5	42.5	10	30	M10×1
BA2BT50087090A	BT50×CHY20-90	20	40	44		90	52.5	42.5	10	30	M10×1
BA2BT50088105A	BT50×CHY25-105	25	55	60	-	105	61	51	10	67	M16×1
BA2BT50089090A	BT50×CHY32-90	32	58	63		90	65	55	10	52	M16×1

* Custom built products are available on request. (BT, HSK, SK, NT, CAT Type) * 特製品可依客戶需求訂製

CAT CHU CNC DRILL CHUCK

CAT直結式鑽夾頭　CAT Shank ANSI B5.50

■ Feature / 特點

- 3 times better clamping capacity, comparing to keyed drill chucks.
- The drill bit won't be loosen or falling off.
- Twice precision than the keyed drill chucks.
- The drill chuck is interchangeable.
- 比普通夾頭多 3 倍的夾持力。
- 鑽頭不會鬆脫或掉落。
- 比普通夾頭多出 2 倍標準。
- 可替換式的夾頭。

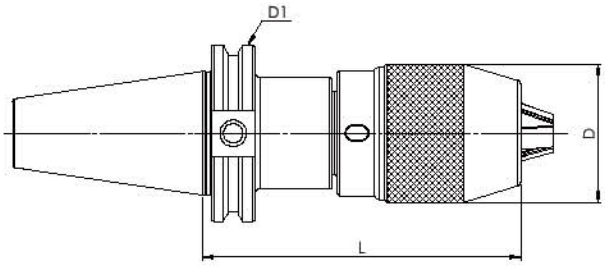

INCH SIZE 英制

Code No. 型號	TYPE 規格	L	D	D1	Spanner No. 扳手編號
BA2CT30042085A	CAT30×CHU 8-3.347	3.347	1.456	1.812	BA12808000001A
BA2CT40042085A	CAT40×CHU 8-3.228	3.228	1.456	2.5	BA12808000001A
BA2CT40043115A	CAT40×CHU 13-4.527	4.527	1.968	2.5	BA12813000001A
BA2CT40044120A	CAT40×CHU 16-4.724	4.724	2.244	2.5	BA12816000001A
BA2CT50043090A	CAT50×CHU 13-3.54	3.54	1.968	3.875	BA12813000001A
BA2CT50044095A	CAT50×CHU 16-3.7	3.7	2.244	3.875	BA12816000001A

* Custom built products are available on request.

CAT ER COLLET CHUCK

CAT 刀把 ER立銑式　CAT Shank ANSI B5.50 with Collet Chuck DIN 6499

■ Application / 產品適用

· The product can be applied for end mills, drill bits, drill reamers, taps, and can clamp any straight cutters and tools.

· 本產品可應用於銑刀，鑽頭，鉸刀，絲攻及可夾持任何直柄的刀具及工具。

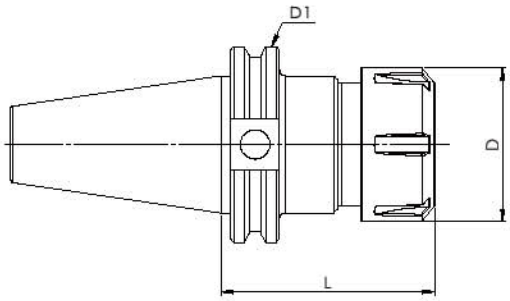

INCH SIZE 英制

Code No. 型號	TYPE 規格	L	D	D1	Spanner No. 扳手編號
BA2CT40023070A	CAT40×ER16- 2.76	2.76	1.102	2,5	BA2ER16020001A
BA2CT40024070A	CAT40×ER20- 2.76	2.76	1.339	2,5	BA2ER20020001A
BA2CT40105070A	CAT40×ER25- 2.76	2.76	1.645	2,5	BA2ER25100001A
BA2CT40106070A	CAT40×ER32- 2.76	2.76	1.969	2,5	BA2ER32100001A
BA2CT40107080A	CAT40×ER40- 3.15	3.15	2.48	2,5	BA2ER40100001A
BA2CT40108102A	CAT40×ER50- 4	4	3.07	2.5	BA2ER50100001A
BA2CT50023102A	CAT50×ER16- 4	4	1.102	3.875	BA2ER16020001A
BA2CT50024102A	CAT50×ER20- 4	4	1.339	3.875	BA2ER20020001A
BA2CT50105102A	CAT50×ER25- 4	4	1.645	3.875	BA2ER25100001A
BA2CT50106102A	CAT50×ER32- 4	4	1.969	3.875	BA2ER32100001A
BA2CT50107102A	CAT50×ER40- 4	4	2.48	3.875	BA2ER40100001A
BA2CT50108102A	CAT50×ER50- 4	4	3.07	3.875	BA2ER50100001A

* Custom built products are available on request.

* 螺帽與扳手選配參考（P.109 頁）* 筒夾選配參考（P.100 102）

CAT MILLING CHUCK

CAT強力式立銑刀把　CAT Shank ANSI B5.50

■ Application / 產品適用

· The Milling chuck can be applied for heavy-duty & higher accuracy cutting.

· 此強力銑刀把適用重型及高精密切削。

■ Feature / 特點

· It is designed with inner rolling needles inside. This design can reduce the friction resistance when tightening and the wear of parts.

· The design of dustproof can prevent iron scrap dropping and extend longevity of chuck.

· The high clamping force is available. The product can prevent the cutting tools from slipping when the users worked it and increase the longevity of cutting tools.

· High rigidity.

· High precision.

· 內部滾針設計，可減少鎖緊時之摩阻力及零件磨耗。

· 防塵設計減少鐵屑掉入以延長使用壽命。

· 高夾持力，防止刀具於加工時滑脫，增加刀具壽命。

· 高剛性。

· 高精密。

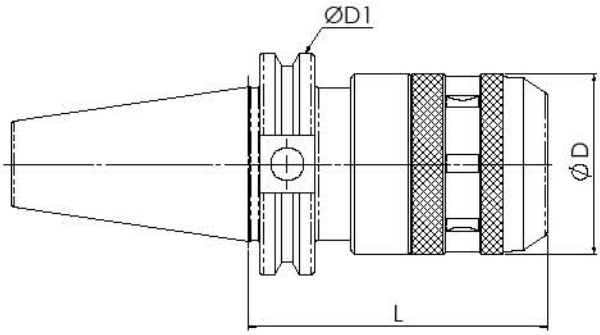

INCH SIZE 英制

Code No. 型號	TYPE 規格	L	D	D1	Spanner No. 扳手編號
BA2CT40020051A	CAT40×C3/4- 3.385	3.385	2.047	2.5	BA20C20030001A
BA2CT40032051A	CAT40×C1-1/4- 4.53	4.53	2.716	2.5	BA20C32030001A
BA2CT50032051A	CAT50×C3/4- 4.13	4.13	2.047	3.875	BA20C20030001A
BA2CT50033251A	CAT50×C1-1/4- 4.13	4.13	2.716	3.875	BA20C32030001A

* Custom built products are available on request.

SK CHU CNC DRILL CHUCK

SK直結式鑽夾頭　SK Shank DIN 69871-A

■ Feature / 特點

- 3 times better clamping capacity, comparing to keyed drill chucks.
- The drill bit won't be loosen or falling off.
- Twice precision than the keyed drill chucks.
- The drill chuck is interchangeable.
- 比普通夾頭多 3 倍的夾持力。
- 鑽頭不會鬆脫或掉落。
- 比普通夾頭多出 2 倍精準。
- 可替換式的夾頭。

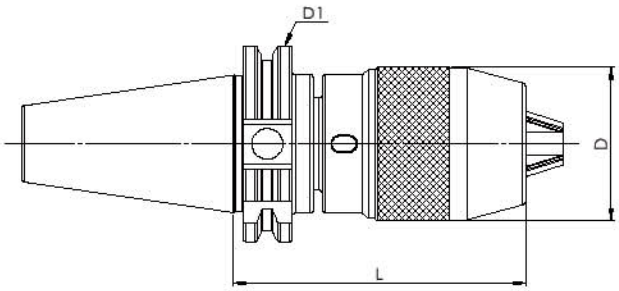

Code No. 型號	TYPE 規格	L	D	D1	Spanner No. 扳手編號
BA2SK30042080A	SK30×CHU8-80	80	37	50	BA12808000001A
BA2SK30043100A	SK30×CHU13-100	100	50		BA12813000001A
BA2SK30044125A	SK30×CHU16-125	125	57		BA12816000001A
BA2SK40042075A	SK40×CHU8-75	75	37	63.55	BA12808000001A
BA2SK40043100A	SK40×CHU13-100	100	50		BA12813000001A
BA2SK40044115A	SK40×CHU16-115	115	57		BA12816000001A
BA2SK50043100A	SK50×CHU13-100	100	50	97.5	BA12813000001A
BA2SK50044105A	SK50×CHU16-105	105	57		BA12816000001A

* Custom built products are available on request.

SK ER COLLET CHUCK DIN 6499

SK刀把 ER立銑式　SK Shank DIN 69871-A with Collet Chuck DIN 6499

■ Application / 產品適用

· The product can be applied for end mills, drill bits, drill reamers, taps, and can clamp any straight cutters and tools.

· 本產品可應用於銑刀，鑽頭，鉸刀，絲攻及可夾持任何直柄的刀具及工具。

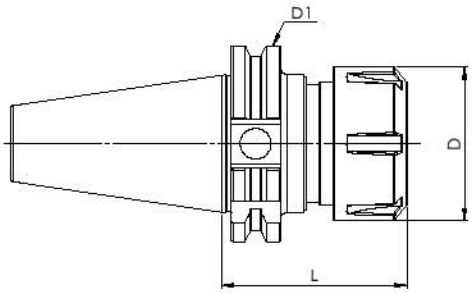

Code No. 型號	TYPE 規格	L	D	D1	Spanner No. 扳手編號
BA2SK30022080A	SK30×ER11-80	80	19	50	BA2ER11020001A
BA2SK30023060A	SK30×ER16-60	60	28		BA2ER16020001A
BA2SK30024060A	SK30×ER20-60	60	34		BA2ER20020001A
BA2SK30105060A	SK30×ER25-60	60	42		BA2ER25100001A
BA2SK30106060A	SK30×ER32-60	60	50		BA2ER32100001A
BA2SK40022080A	SK40×ER11-80	80	19	63.55	BA2ER11020001A
BA2SK40023070A	SK40×ER16-70	70	28		BA2ER16020001A
BA2SK40024070A	SK40×ER20-70	70	34		BA2ER20100001A
BA2SK40024100A	SK40×ER20-100	100	42		BA2ER20100001A
BA2SK40105070A	SK40×ER25-70	70	42		BA2ER25100001A
BA2SK40106060A	SK40×ER32-60	60	50		BA2ER32100001A
BA2SK40107080A	SK40×ER40-80	80	63		BA2ER40100001A
BA2SK40108100A	SK40×ER50-100	100	78		BA2ER50100001A
BA2SK50023100A	SK50×ER16-100	100	28	97.5	BA2ER16020001A
BA2SK50024100A	SK50×ER20-100	100	34		BA2ER20100001A
BA2SK50105070A	SK50×ER25-70	70	42		BA2ER25100001A
BA2SK50106070A	SK50×ER32-70	70	50		BA2ER32100001A
BA2SK50107070A	SK50×ER40-70	70	63		BA2ER40100001A
BA2SK50108080A	SK50×ER50-80	80	78		BA2ER50100001A

* Custom built products are available on request.

SK MILLING CHUCK

SK強力式立銑刀把　SK Shank DIN 69871-A

■ Application / 產品適用

- The Milling chuck can be applied for heavy-duty & higher accuracy cutting.
- 此強力銑刀把適用重型及高精密切削。

■ Feature / 特點

- It is designed with inner rolling needles inside. This design can reduce the friction resistance when tightening and the wear of parts.
- The design of dustproof can prevent iron scrap dropping and extend longevity of chuck.
- The high clamping force is available. The product can prevent the cutting tools from slipping when the users worked it and increase the longevity of cutting tools.
- High rigidity.
- High precision.
- 內部滾針設計，可減少鎖緊時之摩阻力及零件磨耗。
- 防塵設計減少鐵屑掉入以延長使用壽命。
- 高夾持力，防止刀具於加工時滑脫，增加刀具壽命。
- 高剛性。
- 高精密。

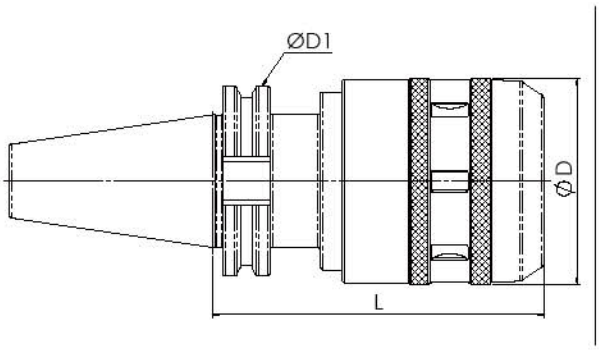

Code No. 型號	TYPE 規格	L	D	D1	Spanner No. 扳手編號
BA2SK30032001A	SK30×C20 - 85	85	52	50	BA20C20030001A
BA2SK40032001A	SK40×C20 - 85	85	52	63.55	BA20C20030001A
BA2SK40033201A	SK40×C32 - 105	105	69		BA20C32030001A
BA2SK50032001A	SK50×C20 - 105	105	52	97.5	BA20C20030001A
BA2SK50033201A	SK50×C32 - 110	110	69		BA20C32030001A
BA2SK50042001A	SK50×C42 - 110	110	86		BA20C42030001A

* Custom built products are available on request.

HSK CHU CNC DRILL CHUCK

HSK直結式鑽夾頭　HSK Shank DIN 69893-1A

■ Feature / 特點

- 3 times better clamping capacity, comparing to keyed drill chucks.
- The drill bit won't be loosen or falling off.
- Twice precision than the keyed drill chucks.
- The drill chuck is interchangeable.
- 比普通夾頭多 3 倍的夾持力。
- 鑽頭不會鬆脫或掉落。
- 比普通夾頭多出 2 倍標準。
- 可替換式的夾頭。

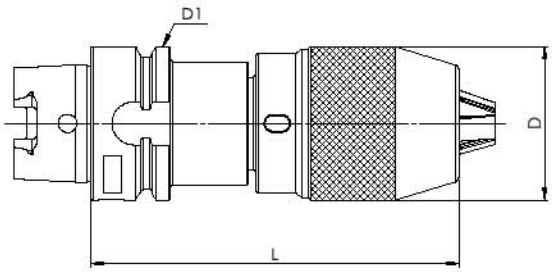

Code No. 型號	TYPE 規格	L	D	D1	Spanner No. 扳手編號
BA2HK50043135A	HSK50A×CHU13(MT2)	135	50	50	BA12813000001A
BA2HK63043145A	HSK63A×CHU13(MT3)	145	50	63	BA12813000001A
BA2HK10043150A	HSK100A×CHU13(MT3)	152	50	100	BA12813000001A

* Custom built products are available on request.

HSK ER COLLET CHUCK

HSK刀把 ER立銑式　HSK Shank DIN 69893-1A with Collet Chuck DIN 6499

■ Application / 產品適用

- The product can be applied for end mills, drill bits, drill reamers, taps, and can clamp any straight cutters and tools.
- 本產品可應用於銑刀，鑽頭，鉸刀，絲攻及可夾持任何直柄的刀具及工具。
- 搭配 HSK 兩面拘束，可增加側向加工的穩定性。

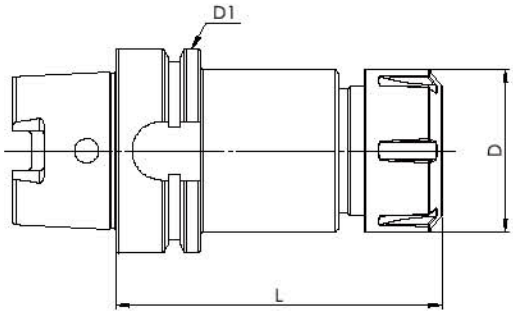

Code No. 型號	TYPE 規格	L	D	D1	Spanner No. 扳手編號
BA2HK4A024080A	HSK40A×ER20- 80	80	34	40	BA2ER20020001A
BA2HK4A105080A	HSK40A×ER25- 80	80	42	40	BA2ER25100001A
BA2HK5A023080A	HSK50A×ER16- 80	80	28	50	BA2ER16020001A
BA2HK5A024080A	HSK50A×ER20- 80	80	34	50	BA2ER20020001A
BA2HK5A105080A	HSK50A×ER25- 80	80	42	50	BA2ER25100001A
BA2HK5A106100A	HSK50A×ER32- 100	100	50	50	BA2ER32100001A
BA2HK6A023080A	HSK63A×ERl6- 80	80	28	63	BA2ER16020001A
BA2HK6A024080A	HSK63A×ER20- 80	80	34	63	BA2ER20020001A
BA2HK6A105080A	HSK63A×ER25- 80	80	42	63	BA2ER25100001A
BA2HK6A106080A	HSK63A×ER32- 80	80	50	63	BA2ER32100001A
BA2HK6A107080A	HSK63A×ER40- 80	80	63	63	BA2ER40100001A
BA2HK6A108120A	HSK63A×ER50- 120	120	78	63	BA2ER50100001A

* Custom built products are available on request.

HSK ER COLLET CHUCK

HSK刀把 ER立銑式　HSK Shank DIN 69893-1A with Collet Chuck DIN 6499

■ Application / 產品適用

- The product can be applied for end mills, drill bits, drill reamers, taps, and can clamp any straight cutters and tools.
- The product matches HSK BBT system (Big+Plus). It can increase the stability on the side direction processing.
- 本產品可應用於銑刀，鑽頭，鉸刀，絲攻及可夾持任何直柄的刀具及工具。
- 搭配 HSK 兩面拘束，可增加側向加工的穩定性。

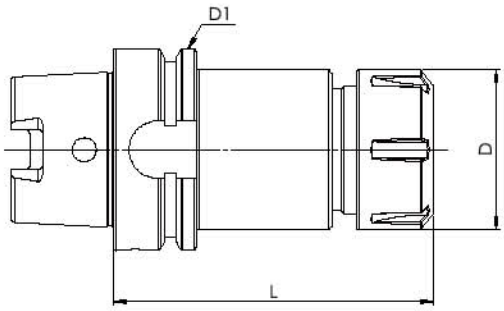

Code No. 型號	TYPE 規格	L	D	D1	Spanner No. 扳手編號
BA2HK1A023080A	HSK100A×ER16- 80	80	28	100	BA2ER16020001A
BA2HK1A024080A	HSK100A×ER20- 80	80	34	100	BA2ER20020001A
BA2HK1A105100A	HSK100A×ER25- 100	100	42	100	BA2ER25100001A
BA2HK1A106100A	HSK100A×ER32- 100	100	50	100	BA2ER32100001A
BA2HK1A107100A	HSK100A×ER40- 100	100	63	100	BA2ER40100001A
BA2HK1A108100A	HSK100A×ER50- 100	100	78	100	BA2ER50100001A

* Custom built products are available on request.

HSK MILLING CHUCK

HSK強力式立銑刀把　HSK Shank DIN 69893-1A

■ Application / 產品適用

- The Milling chuck can be applied for heavy-duty & higher accuracy cutting.
- The product matches HSK BBT system (Big+Plus). It can increase the stability on the side direction processing.
- 此強力銑刀把適用重型及高精密切削。
- 搭配 HSK 兩面拘束，可增加側向加工的穩定性。

■ Feature / 特點

- It is designed with inner rolling needles inside. This design can reduce the friction resistance when tightening and the wear of parts.
- The design of dustproof can prevent iron scrap dropping and extend longevity of chuck.
- The high clamping force is available. The product can prevent the cutting tools from slipping when the users worked it and increase the longevity of cutting tools.
- High rigidity.
- High precision.
- 內部滾針設計，可減少鎖緊時之摩阻力及零件磨耗。
- 防塵設計減少鐵屑掉入以延長使用壽命。
- 高夾持力，防止刀具於加工時滑脫，增加刀具壽命。
- 高剛性。
- 高精密。

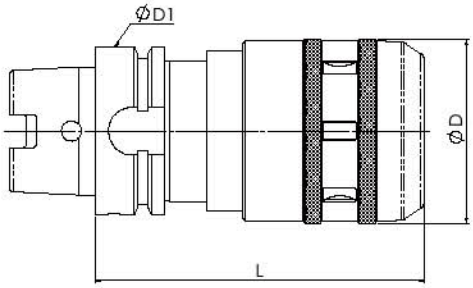

Code No. 型號	TYPE 規格	L	D	D1	Spanner No. 扳手編號
BA2HK50032001A	HSK50A×C20- 120	120	52	50	BA20C20030001A
BA2HK63032001A	HSK63A×C20- 90	90	52	63	
BA2HK63033202A	HSK63A×C32- 120	120	69	63	BA20C32030001A
BA2HK63034201A	HSK63A×C42- 120	120	86	63	BA20C42030001A

* Custom built products are available on request.

BT Hex Key Drill Chuck MAS 403 (JIS B 6339)

BT齒輪式夾頭

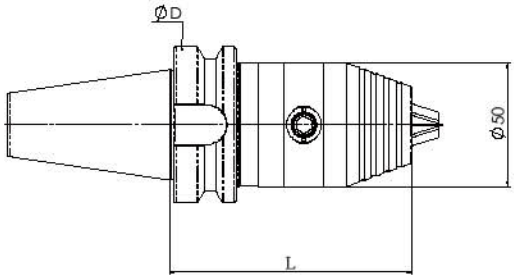

Code No. 型號	TYPE 規格	夾持範圍 Capacity		L	ΦD	Spanner No. 扳手編號	Weight (g) 重量
		mm	inch				
BA2BT30223201A	BT30×GHK13S-100	0.3-13	1/64-1/2	100	63	BESTC0006	1450
BA2BT30224201A	BT30×GHK16S-105	1.5-16	1/16-5/8	105	100		1460
BA2BT40223201A	BT40×GHK13S-100	0.3-13	1/64-1/2	100	63		1990
BA2BT40224201A	BT40×GHK16S-105	1.5-16	1/16-5/8	105	63		1990
BA2BT50223201A	BT50×GHK13S-110	0.3-13	1/64-1/2	110	100		4500
BA2BT50224201A	BT50×GHK16S-115	1.5-16	1/16-5/8	115	100		4360

* Custom built products are available on request.

SK Hex Key Drill Chuck

SK齒輪式夾頭　DIN 69871

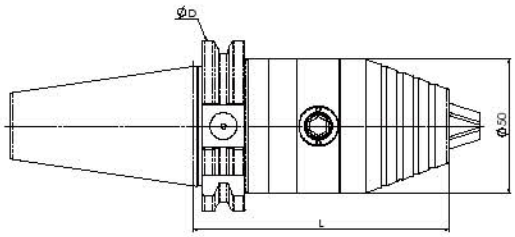

Code No. 型號	TYPE 規格	夾持範圍 Capacity		L	ΦD	Spanner No. 扳手編號	Weight (g) 重量
		mm	inch				
BA2SK40223201A	SK40×GHK13S-90	0.3-13	1/64-1/2	90	63.55	BESTC0006	1810
BA2SK40224201A	SK40×GHK16S-95	1.5-16	1/16-5/8	95	63.55		1830
BA2SK50223201A	SK50×GHK13S-90	0.3-13	1/64-1/2	90	97.5		3390
BA2SK50224201A	SK50×GHK16S-95	1.5-16	1/16-5/8	95	97.5		3280

* Custom built products are available on request.

HSK Hex Key Drill Chuck (DIN69893)

HSK齒輪式夾頭

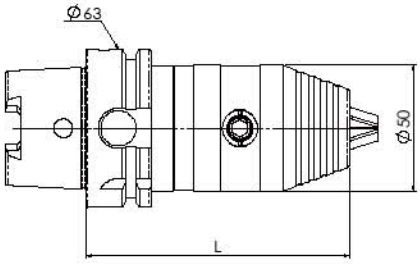

Code No. 型號	TYPE 規格	夾持範圍 Capacity		L	ΦD	Spanner No. 扳手編號	Weight (g) 重量
		mm	inch				
BA2HK63223201A	HSK63A×GHK13S-105	0.3-13	1/64-1/2	105	63	BESTC0006	1800
BA2HK63224201A	HSK63A×GHK16S-110	1.5-16	1/16-5/8	110			

* Custom built products are available on request.

VDI Hex Key Drill Chuck (DIN 69880-1)

VDI齒輪式夾頭

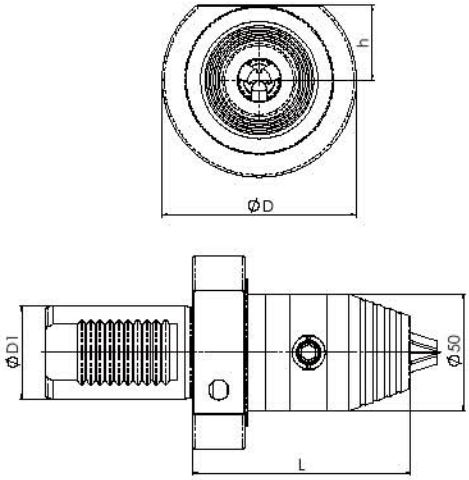

Code No. 型號	TYPE 規格	夾持範圍 Capacity		L	ΦD	h	ΦD1	Spanner No. 扳手編號	Weight (g) 重量
		mm	inch						
BA2VD20221201A	VDI20×GHK8S-70	0.3-8	1/64-5/16	70	50	-	20	BESTC0006	
BA2VD20223201A	VDI20×GHK13S-88	0.3-13	1/64-1/2	88	68	-	20		
BA2VD30223201A	VDI30×GHK13S-93	0.3-13	1/64-1/2	93	68	28	30		1790
BA2VD30224201A	VDI30×GHK16S-98	1.5-16	1/16-1/2	98	68	28	30		1760
BA2VD40223201A	VDI40×GHK13S-93	0.3-13	1/64-1/2	93	83	32	40		2500
BA2VD40224201A	VDI40×GHK16S-98	1.5-16	1/16-5/8	98	83	32	40		2500

* Custom built products are available on request.

HEX KEY DRILL CHUCK Arbor Type

MT (Morse Taper)

■ Application / 產品適用

· Arbor structure makes its performance perfect for drilling press and machine center.

· Fine components ensure the tolerance and accuracy well.

· The benefit of titanium jaws is to increase the intensity and wear-resistance.

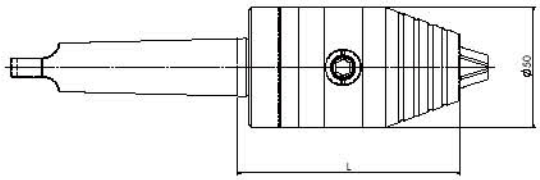

Code No. 型號	TYPE 規格	夾持範圍 Capacity		L	ΦD	Spanner No. 扳手編號	Weight (g) 重量
		mm	inch				
BA2MT02223201A	MT2×GHK13S-88	0.3-13	1/64-1/2	88	50	BESTC0006	1330
BA2MT02224201A	MT2×GHK16S-93	1.5-16	1/16-5/8	93	50		1390
BA2MT03223201A	MT3×GHK13S -88	0.3-13	1/64-1/2	88	50		1380
BA2MT03224201A	MT3×GHK16S -93	1.5-16	1/16-5/8	93	50		1360
BA2MT04223201A	MT4×GHK13S -89	0.3-13	1/64-1/2	89	50		1600
BA2MT04224201A	MT4×GHK16S -94	1.5-16	1/16-5/8	94	50		1830

* Custom built products are available on request.

HEX KEY DRILL CHUCK Arbor Type (DIN1835_B)

D(Straight Shank)

■ Application / 產品適用

· Arbor structure makes its performance perfect for drilling press and machine center.

· Fine components ensure the tolerance and accuracy well.

· The benefit of titanium jaws is to increase the intensity and wear-resistance.

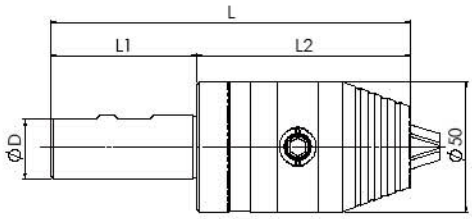

Code No. 型號	TYPE 規格	夾持範圍 Capacity		L	L1	L2	ΦD	Spanner No. 扳手編號	Weight (g) 重量
		mm	inch						
BA2DD20223201A	D20BxGHK13S-83	0.3-13	1/64-1/2	133	50	83	20	BESTC0006	1230
BA2DD20224201A	D20BxGHK16S-88	1.5-16	1/16-5/8	138	50	88	20		1240
BA2DD25223201A	D25BxGHK13S-83	0.3-13	1/64-1/2	139	56	83	25		
BA2DD25224201A	D25BxGHK16S-88	1.5-16	1/16-5/8	144	56	88	25		
BA2DD32223201A	D32BxGHK13S-83	0.3-13	1/64-1/2	143	60	83	32		
BA2DD32224201A	D32BxGHK16S-88	1.5-16	1/16-5/8	148	60	88	32		

* Custom built products are available on request.

Coolant Pipe
冷卻導管

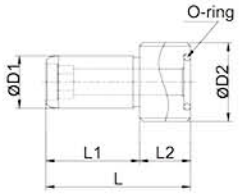

Code No. 型號	HSK NO.	ΦD1	ΦD2	L	L1	L2	O ring
BE846H101A	HSK32	6	M10×1.0	26	20.5	5.5	P4
BE846H201A	HSK40	8	M12×1.0	29.5	22	7.5	P6
BE846H301A	HSK50	10	M16×1.0	33	23.5	9.5	P9
BE846H401A	HSK63	12	M18×1.0	36.5	25	11.5	P11
BE846H501A	HSK80	14	M20×1.5	40	25.5	13.5	P12
BE846H601A	HSK100	16	M24×1.5	44	28.5	15.5	P15

BT/Coolant Thru-Hole Models — Pull Stud 拉栓
BT水孔型

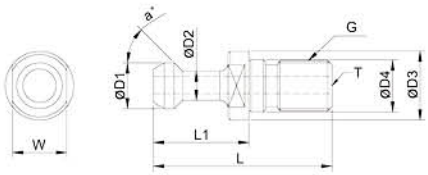

Code No. 型號	Type 規格 BT α°	T	W	L	L1	ΦD1	ΦD2	ΦD3	ΦD4	G
BE812BW04A	BT40-45°	Φ4	19	60	35	15	10	23	17	M16
BE812BW05A	BT40-60°	Φ4								
BE812BW06A	BT40-90°	Φ4								
BE812BW07A	BT50-45°	Φ7	30	85	45	23	17	38	25	M24
BE812BW08A	BT50-60°	Φ7								
BE812BW09A	BT50-90°	Φ7								

BT/Threading Ground Models — Pull Stud 拉栓
BT磨牙型

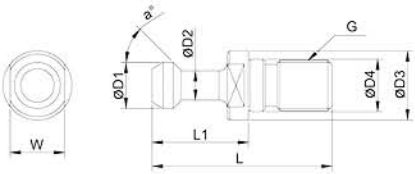

Code No. 型號	Type 規格 BT α°	W	L	L1	ΦD1	ΦD2	ΦD3	ΦD4	ΦD4
BE812BG01A	BT30-45°G	13	43	23	11	7	16.5	12.5	M12
BE812BG04A	BT40-45°G	19	60	35	15	10	23	17	M16
BE812BG07A	BT50-45°G	30	85	45	23	17	38	25	M24
BE812BG02A	BT30-60°G	13	43	23	11	7	16.5	12.5	M12
BE812BG05A	BT40-60°G	19	60	35	15	10	23	17	M16
BE812BG08A	BT50-60°G	30	85	45	23	17	38	25	M24
BE812BG03A	BT30-90°G	13	43	23	11	7	16.5	12.5	M12
BE812BG06A	BT40-90°G	19	60	35	15	10	23	17	M16
BE812BG09A	BT50-90°G	30	85	45	23	17	38	25	M24

DIN A Type
DIN A型

Pull Stud 拉栓

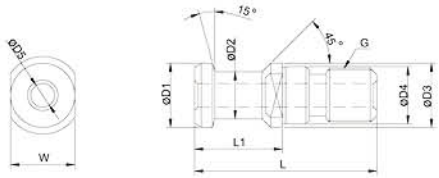

Code No. 型號	Type 規格	W	L	L1	ΦD1	ΦD2	ΦD3	ΦD4	ΦD5	G
BE812DA01A	DIN 30A	14	44	24	13	9	17	13	-	M12
BE812DA02A	DIN 40A	19	54	26	19	14	23	17	7	M16
BE812DA03A	DIN 40-A-L	19	54	29	19	14	23	17	7	M16
BE812DA04A	DIN 50A	30	74	34	28	21	36	25	11.5	M24

DIN B Type
DIN B型

Pull Stud 拉栓

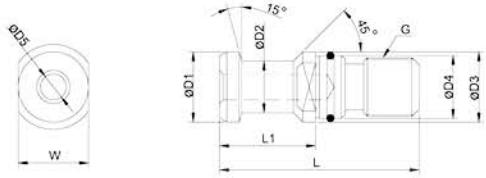

Code No. 型號	Type 規格	W	L	L1	ΦD1	ΦD2	ΦD3	ΦD4	ΦD5	G
BE812DB01A	DIN 30B	14	44	24	13	9	17	13	-	M12
BE812DB02A	DIN 40B	19	54	26	19	14	23	17	7	M16
BE812DB03A	DIN 50B	30	74	34	28	21	36	25	11.5	M24

DIN / R Type
DIN R型

Pull Stud 拉栓

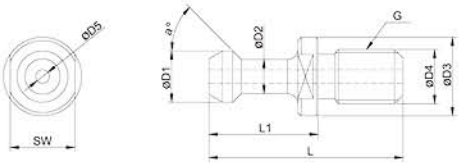

Code No. 型號	Type 規格	SW	L	L1	ΦD1	ΦD2	ΦD3	ΦD4	ΦD5	G
BE812DR01A	DIN 40-R	19	57	32	15	10	23	16	4	M16*P2.0

ISO A Type / ISO B Type — Pull Stud 拉栓

ISO A型 / ISO B型

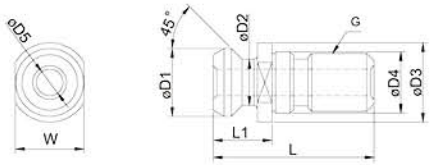

Code No. 型號	Type 規格	W	L	L1	ΦD1	ΦD2	ΦD3	ΦD4	ΦD5	G
BE812SA01A	ISO 40-A	19	54	26	19	14	23	17	7	M16
BE812SA02A	ISO 50-A	30	74	34	28	21	36	25	11.5	M24
BE812SB01A	ISO 40-B	19	44.5	16.4	18.8	12.95	22.5	17	7.3	M16
BE812SB02A	ISO 50-B	30	65.5	25.5	29.1	19.6	37	25	11.5	M24

CAT Standard Models — Pull Stud 拉栓

CAT標準型

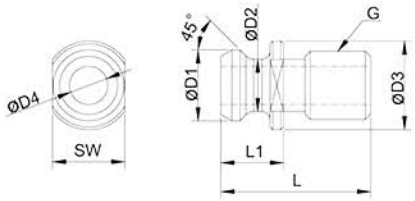

Code No. 型號	Type 規格	SW	L	L1	ΦD1	ΦD2	ΦD3	ΦD4	G
BE812CT01A	CAT 40	0.75	1.5	0.64	0.74	0.49	0.94	0.281	5/8"-11
BE812CT02A	CAT 50	1.25	2.3	1	1.14	0.82	1.44	0.468	1"-8

BT(S) Type of car bou layer maps — Pull Stud 拉栓

強力型拉栓

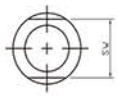

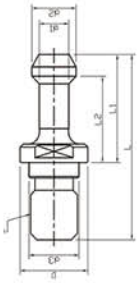

-190° cryogenic.
treatment.
High hardness.
High tensile.

強力行拉栓
碳層分布穩定
本產品經過 -190°超冷處理
硬度增加　具有高拉力

Code No. 型號	Type 規格	D	d1	d2	d3	L	L1	L2	SW	P
BE815BS01A	BT30-45°S	16.5	7	11	12.5	43	23	18	13	M12*1.75
BE815BS02A	BT30-60°S	16.5	7	11	12.5	43	23	18	13	M12*1.75
BE815BS03A	BT40-45°S	23	10	15	17	60	35	28	19	M16*2.0
BE815BS04A	BT40-60°S	23	10	15	17	60	35	28	19	M16*2.0

*訂購數量 100pcs/箱

ER SPRING COLLET SYSTEM

彈性筒夾 DIN 6499

■ Application / 產品適用

· It is applied for a variety of processing including drilling, milling, tapping and grinding.

· 它適用於各種的加工，包含鑽孔，銑床，攻牙和研磨。

Toolholder not included

不含刀把

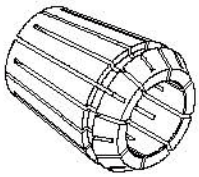

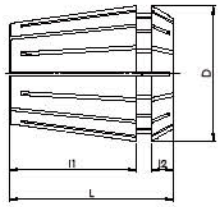

Code No. 型號	Type 規格	Collet 筒夾	D	L	l1	l2
BE8000100A	ER8×9	5, 4.5, 4, 3.5, 3, 2.5, 2, 1.5, 1	8.5	13.5	10.8	1.5
BE8000200A	ER11×7	7, 6, 5, 4, 3, 2, 1	11.5	18	13.5	2.5
BE8000300A	ER11×13	7, 6.5, 6, 5.5, 5, 4.5, 4, 3.5, 3, 2.5, 2, 1.5, 1				
BE8000400A	ER16×8	10,9,8,7,6,5,4,3	17	27	20.8	4
BE8000500A	ER16×10	10, 9, 8,7, 6, 5, 4, 3, 2,1				
BE8000600A	ER20×10	13,12, 11, 10, 9, 8, 7, 6, 5, 4	21	31	23.9	4.8
BE8000700A	ER20×12	13, 12, 11, 10, 9, 8, 7, 6, 5, 4, 3,2				
BE8000800A	ER25×7	13, 12, 11, 10, 9, 8, 7, 6, 5, 4, 3,2	26	35	25.9	5
BE8000900A	ER25×15	16, 15,14, 13,12,11,10, 9, 8, 7, 6, 5, 4, 3, 2				
BE8001000A	ER32×6	20, 16, 12, 10, 8, 6	33	40	30.9	5.5
BE8001100A	ER32×11	20, 18, 16, 15, 13, 12, 10, 8, 6, 5,4				
BE8001200A	ER32×18	20, 19, 18, 17, 16, 15, 14, 13, 12, 11, 10, 9, 8, 7, 6, 5, 4, 3				
BE8001300A	ER40×7	25, 20, 16, 12, 10, 8, 6	41	46	34.9	7
BE8001400A	ER40×15	26, 25, 22, 21,20, 18, 16, 15, 13, 12, 10, 8, 6, 5, 4				
BE8001500A	ER40×23	26, 25, 24, 23, 22, 21,20, 19, 18, 17, 16, 15, 14, 13, 12, 11, 10, 9, 8, 7, 6, 5, 4				
BE8001600A	ER50×12	34, 32, 30, 28, 26, 24, 22, 20, 18,16,14, 12	52	60	46	8.5

ER SPRING COLLET SYSTEM

彈性筒夾 DIN 6499

■ Application / 產品適用

· It is applied for a variety of processing including drilling, milling, tapping and grinding.

· 它適用於各種的加工，包含鑽孔，銑床，攻牙和研磨。

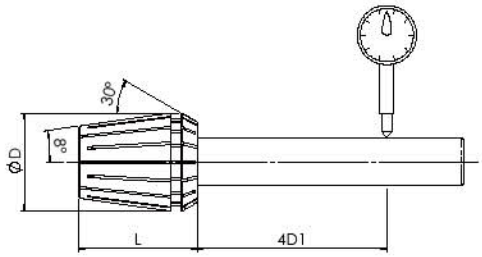

Type	ØD	L
ER08	8.5	13.5
ER11	11.5	18
ER16	17	27
ER20	21	31
ER25	26	35
ER32	33	40
ER40	41	46
ER50	52	60

Code No. 型號	Type 規格
BE8000101A	ER8 (1.0-0.5)
BE8000102A	ER8 (1.5-1.0)
BE8000103A	ER8 (2.0-1.5)
BE8000104A	ER8 (2.5-2.0)
BE8000105A	ER8 (3.0-2.5)
BE8000106A	ER8 (3.5-3.0)
BE8000107A	ER8 (4.0-3.5)
BE8000108A	ER8 (4.5-4.0)
BE8000109A	ER8 (5.0-4.5)
BE8000301A	ER11 (1.0-0.5)
BE8000302A	ER11 (1.5-1.0)
BE8000303A	ER11 (2.0-1.5)
BE8000304A	ER11 (2.5-2.0)
BE8000305A	ER11 (3.0-2.5)
BE8000306A	ER11 (3.5-3.0)
BE8000307A	ER11 (4.0-3.5)
BE8000308A	ER11 (4.5-4.0)
BE8000309A	ER 11 (5.0-4.5)
BE8000310A	ER11 (5.5-5.0)
BE8000311A	ER11 (6.0-5.5)
BE8000312A	ER11 (6.5-6.0)
BE8000313A	ER11 (7.0-6.5)
BE8000501A	ER16 (1.0-0.5)
BE8000502A	ER16 (1.5-1.0)
BE8000503A	ER16 (2.0-1.5)
BE8000504A	ER16 (2.5-2.0)
BE8000505A	ER16 (3.0-2.5)
BE8000506A	ER16 (3.5-3.0)
BE8000507A	ER16 (4.0-3.5)
BE8000508A	ER16 (4.5-4.0)
BE8000509A	ER16 (5.0-4.5)
BE8000510A	ER16 (5.5-5.0)
BE8000511A	ER16 (6.0-5.5)
BE8000512A	ER16 (6.5-6.0)
BE8000513A	ER16 (7,0-6.5)
BE8000514A	ER16 (7.5-7.0)
BE8000515A	ER16 (8.0-7.5)
BE8000516A	ER16 (8.5-8.0)
BE8000517A	ER16 (9.0-8.5)
BE8000518A	ER16 (9.5-9.0)
BE8000519A	ER16 (10.0-9.5)

Code No. 型號	Type 規格
BE8000701A	ER20(1.0-0.5)
BE8000702A	ER20(0.5-1.0)
BE8000703A	ER20(2.0-1.5)
BE8000704A	ER20(2.5-2.0)
BE8000705A	ER20(3.0-2.5)
BE8000706A	ER20(3.5-3.0)
BE8000707A	ER20(4.0-3.5)
BE8000708A	ER20(4.5-4.0)
BE8000709A	ER20(5.0-4.5)
BE8000710A	ER20(5.5-5.0)
BE8000711A	ER20(6.0-5.5)
BE8000712A	ER20(6.5-6.0)
BE8000713A	ER20(7.0-6.5)
BE8000714A	ER20(7.5-7.0)
BE8000715A	ER20(8.0-7.5)
BE8000716A	ER20(8.5-8.0)
BE8000717A	ER20(9.0-8.5)
BE8000718A	ER20(9.5-9.0)
BE8000719A	ER20(10-9.5)
BE8000720A	ER20(10.5-10)
BE8000721A	ER20(11-10.5)
BE8000722A	ER20(11.5-11)
BE8000723A	ER20(12-11.5)
BE8000724A	ER20(12.5-12)
BE8000725A	ER20(13.-12.5)
BE8000903A	ER25(2.0-1.0)
BE8000904A	ER25(3.0-2.0)
BE8000905A	ER25(4.0-3.0)
BE8000906A	ER25(5.0-4.0)
BE8000907A	ER25(6.0-5.0)
BE8000908A	ER25(7.0-6.0)
BE8000909A	ER25(8.0-7.0)
BE8000910A	ER25(9.0-8.0)
BE8000911A	ER25(10-9.0)
BE8000912A	ER25(11-10)
BE8000913A	ER25(12-11)
BE8000914A	ER25(13-12)
BE8000915A	ER25(14-13)
BE8000916A	ER25(15-14)
BE8000917A	ER25(16-15)

ER SPRING COLLET SYSTEM

彈性筒夾　DIN 6499

■ Application / 產品適用

· It is applied for a variety of processing including drilling, milling, tapping, mill.

· 它適用於各種的加工，包含鑽孔，銑床，攻牙和銑刀。

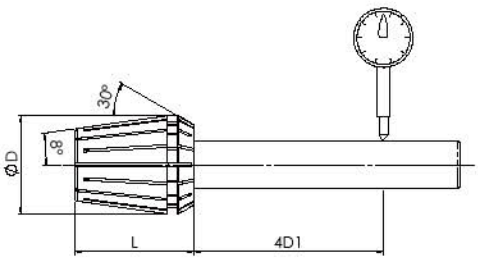

Type	ØD	L
ER08	8.5	13.5
ER11	11.5	18
ER16	17	27
ER20	21	31
ER25	26	35
ER32	33	40
ER40	41	46
ER50	52	60

Code No. 型號	Type 規格
BE8001101A	ER32 (2.0-1.0)
BE8001102A	ER32 (3.0-2.0)
BE8001103A	ER32 (4.0-3.0)
BE8001104A	ER32 (5.0-4.0)
BE8001105A	ER32 (6.0-5.0)
BE8001106A	ER32 (7.0-6.0)
BE8001107A	ER32 (8.0-7.0)
BE8001108A	ER32 (9.0-8.0)
BE8001109A	ER32 (10-9.0)
BE8001110A	ER32 (11-10)
BE8001111A	ER32 (12-11)
BE8001112A	ER32 (13-12)
BE8001113A	ER32 (14-13)
BE8001114A	ER32 (15-14)
BE8001115A	ER32 (16-15)
BE8001116A	ER32 (17-16)
BE8001117A	ER32 (18-17)
BE8001118A	ER32 (19-18)
BE8001119A	ER32 (20-19)

Code No. 型號	Type 規格
BE8001301A	ER40 (3.0-2.0)
BE8001302A	ER40 (4.0-3.0)
BE8001303A	ER40 (5.0-4.0)
BE8001304A	ER40 (6.0-5.0)
BE8001305A	ER40 (7.0-6.0)
BE8001306A	ER40 (8.0-7.0)
BE8001307A	ER40 (9.0-8.0)
BE8001308A	ER40 (10-9.0)
BE8001309A	ER40 (11-10)
BE8001310A	ER40 (12-11)
BE8001311A	ER40 (13-12)
BE8001312A	ER40 (14-13)
BE8001313A	ER40 (15-14)
BE8001314A	ER40 (16-15)
BE8001315A	ER40 (17-16)
BE8001316A	ER40 (18-17)
BE8001317A	ER40 (19-18)
BE8001318A	ER40 (20-19)
BE8001319A	ER40 (21-20)
BE8001320A	ER40 (22-21)
BE8001321A	ER40 (23-22)
BE8001322A	ER40 (24-23)
BE8001323A	ER40 (25-24)
BE8001324A	ER40 (26-25)
BE8001507A	ER50 (12-10)
BE8001508A	ER50 (14-12)
BE8001509A	ER50 (16-14)
BE8001510A	ER50 (18-16)
BE8001511A	ER50 (20-18)
BE8001512A	ER50 (22-20)
BE8001513A	ER50 (24-22)
BE8001514A	ER50 (26-24)
BE8001515A	ER50 (28-26)
BE8001516A	ER50 (30-28)
BE8001517A	ER50 (32-30)
BE8001518A	ER50 (34-32)

SK SPRING COLLET SYSTEM

彈性筒夾 DIN 6499

■ Application / 產品適用

· It is applied for a variety of processing including drilling, milling, tapping and grinding.

· 它適用於各種的加工，包含鑽孔，銑床，攻牙和研磨。

Type	ØD	L
SK06	10.5	25
SK10	15.5	30.5
SK13	20	39
SK16	24.5	45
SK20	28.5	54
SK25	35.5	57

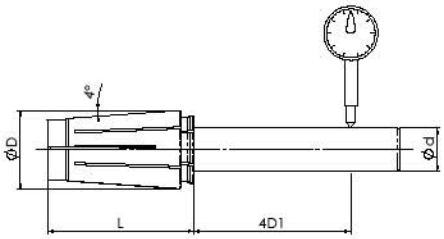

SK6			
Code No.	Type	Φd	RANGE
BE8102101A	SK6	2	2~1.75
BE8102102A	SK6	2.5	2.5~2.25
BE8102103A	SK6	3	3~2.75
BE8102104A	SK6	3.5	3.5~3
BE8102105A	SK6	4	4~3.5
BE8102106A	SK6	4.5	4.5~4
BE8102107A	SK6	5	5~4.5
BE8102108A	SK6	5.5	5.5~5
BE8102109A	SK6	6	6~5.5

SK16			
Code No.	Type	Φd	RANGE
BE8102501A	SK16	3	3~2.75
BE8102502A	SK16	3.5	3.5~3
BE8102503A	SK16	4	4~3.5
BE8102504A	SK16	4.5	4.5~4
BE8102505A	SK16	5	5~4.5
BE8102506A	SK16	5.5	5.5~5
BE8102507A	SK16	6	6.~5.5
BE8102508A	SK16	6.5	6.5~6
BE8102509A	SK16	7	7~6.5
BE8102510A	SK16	7.5	7.5~7
BE8102511A	SK16	8	8~7.5
BE8102512A	SK16	8.5	8.5~8
BE8102513A	SK16	9	9~8.5
BE8102514A	SK16	9.5	9.5~9
BE8102515A	SK16	10	10~9.5
BE8102516A	SK16	10.5	10.5~10
BE8102517A	SK16	11	11~10.5
BE8102518A	SK16	11.5	11.5~11
BE8102519A	SK16	12	12~11.5
BE8102520A	SK16	12.5	12.5~12
BE8102521A	SK16	13	13~12.5
BE8102522A	SK16	13.5	13.5~13
BE8102523A	SK16	14	14~13.5
BE8102524A	SK16	14.5	14.5~14
BE8102525A	SK16	15	15~14.5
BE8102526A	SK16	15.5	15~5~15
BE8102527A	SK16	16	16~15.5

SK25			
Code No.	Type	Φd	RANGE
BE8103101A	SK25	6	6~5.5
BE8103103A	SK25	8	8~7.5
BE8103105A	SK25	10	10~9.5
BE8103107A	SK25	12	12~11.5
BE8103109A	SK25	14	14~13.4
BE8103111A	SK25	16	16~15.5
BE8103113A	SK25	18	18~17.5
BE8103115A	SK25	20	20~19.5
BE8103117A	SK25	22	22~21.5
BE8103119A	SK25	24	24~23.5
BE8103120A	SK25	25	25~24.5
BE8103121A	SK25	25.4	25.4~25

SK10			
Code No.	Type	Φd	RANGE
BE8102301A	SK10	2	2~1.75
BE8102302A	SK10	2.5	2.5~2.25
BE8102303A	SK10	3	3~2.75
BE8102304A	SK10	3.5	3.5~3
BE8102305A	SK10	4	4~3.5
BE8102306A	SK10	4.5	4.5~4
BE8102307A	SK10	5	5~4.5
BE8102308A	SK10	5.5	5.5~5
BE8102309A	SKIO	6	6.~5.5
BE8102310A	SK10	6.5	6.5~6
BE8102311A	SK10	7	7~6.5
BE8102312A	SK10	7.5	7.5~7
BE8102313A	SK10	8	8~7.5
BE8102314A	SK10	8.5	8.5~8
BE8102315A	SK10	9	9~8.5
BE8102316A	SK10	9.5	9.5~9
BE8102317A	SK10	10	10~9.5

SK20			
Code No.	Type	Φd	RANGE
BE8102901A	SK20	3	3~2.75
BE8102902A	SK20	4	4~3.5
BE8102903A	SK20	5	5~4.5
BE8102904A	SK20	6	6.~5.5
BE8102905A	SK20	6.5	6.5~6
BE8102906A	SK20	7	7~6.5
BE8102907A	SK20	7.5	7.5~7
BE8102908A	SK20	8	8~7.5
BE8102909A	SK20	8.5	8.5~8
BE8102910A	SK20	9	9~8.5
BE8102911A	SK20	9.5	9.5~9
BE8102912A	SK20	10	10~9.5
BE8102913A	SK20	10.5	10.5~10
BE8102914A	SK20	11	11~10.5
BE8102915A	SK20	11.5	11.5~11
BE8102916A	SK20	12	12~11.5
BE8102917A	SK20	12.5	12.5~12
BE8102918A	SK20	13	13~12.5
BE8102919A	SK20	13.5	13.5~13
BE8102920A	SK20	14	14~13.5
BE8102921A	SK20	14.5	14.5~14
BE8102922A	SK20	15	15~14.5
BE8102923A	SK20	15.5	15.5~15
BE8102924A	SK20	16	16~15.5
BE8102925A	SK20	16.5	16.5~16
BE8102926A	SK20	17	17~16.5
BE8102927A	SK20	17.5	17.5~17
BE8102928A	SK20	18	18~17.5
BE8102929A	SK20	18.5	18.5~18
BE8102930A	SK20	19	19~18.5
BE8102931A	SK20	19.5	19.5~19
BE8102932A	SK20	20	20~19.5

STRAIGHT COLLET
直筒式彈性筒夾

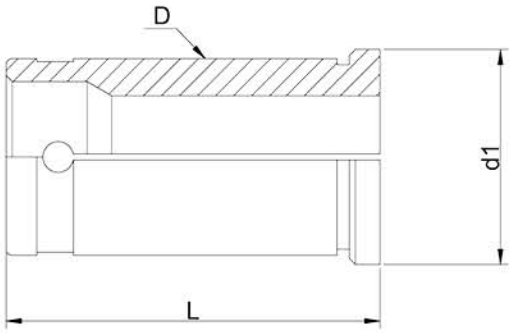

Code No. 型號	Type 規格	L	D	d1
BE8004301A	C20-3	52	20	25
BE8004302A	C20-4			
BE8004303A	C20-5			
BE8004304A	C20-6			
BE8004305A	C20-7			
BE8004306A	C20-8			
BE8004307A	C20-9			
BE8004308A	C20-10			
BE8004309A	C20-11			
BE8004310A	C20-12			
BE8004311A	C20-13			
BE8004312A	C20-14			
BE8004313A	C20-15			
BE8004314A	C20-16			

Code No. 型號	Type 規格	L	D	d1
BE8004501A	C25-4	60	25	31
BE8004502A	C25-5			
BE8004503A	C25-6			
BE8004505A	C25-8			
BE8004506A	C25-9			
BE8004507A	C25-10			
BE8004508A	C25-11			
BE8004509A	C25-12			
BE8004517A	C25-13			
BE8004510A	C25-14			
BE8004511A	C25-15			
BE8004512A	C25-16			
BE8004513A	C25-17			
BE8004514A	C25-18			
BE8004515A	C25-19			
BE8004516A	C25-20			

* 公制 ↔ 公制；公制 ↔ 英制；英制 ↔ 英制，視客戶需求

STRAIGHT COLLET
直筒式彈性筒夾

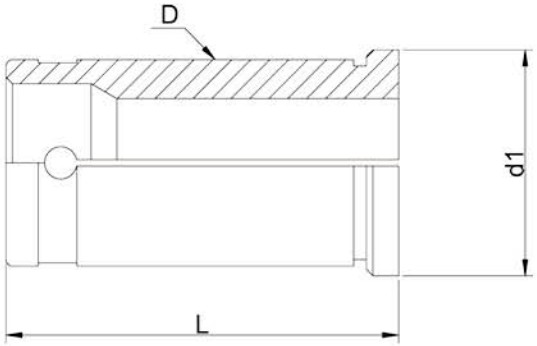

Code No. 型號	Type 規格	L	D	d1
BE8004701A	C32-3	73	32	37
BE8004702A	C32-4			
BE8004703A	C32-5			
BE8004704A	C32-6			
BE8004705A	C32-7			
BE8004706A	C32-8			
BE8004707A	C32-9			
BE8004708A	C32-10			
BE8004709A	C32-11			
BE8004710A	C32-12			
BE8004711A	C32-13			
BE8004712A	C32-14			
BE8004713A	C32-15			
BE8004714A	C32-16			
BE8004715A	C32-17			
BE8004716A	C32-18			
BE8004717A	C32-19			
BE8004718A	C32-20			
BE8004719A	C32-21			
BE8004720A	C32-22			
BE8004723A	C32-25			

Code No. 型號	Type 規格	L	D	d1
BE8004901A	C42-6	78	42	48
BE8004902A	C42-8			
BE8004903A	C42-10			
BE8004904A	C42-12			
BE8004905A	C42-14			
BE8004906A	C42-16			
BE8004907A	C42-18			
BE8004908A	C42-20			
BE8004909A	C42-22			
BE8004910A	C42-25			
BE8004911A	C42-32			

Z Axial Preset Gauge
Z軸設定器

- For setting length on machining centers/lathe centers.
- Setting height:50.00±0.005mm.
- large measuring surface and easy to operate.
- low sprang force, May avoid the milling cutter or the drill bit breaking.
- Easy to be calibrated by a ground parallel or gauge block.
- Better parallelism, sensitivit, and precision for use.
- 在電腦銑床 / 車床上設定刀長用。
- 設計高度：50,00±0.005mm。
- 量側面大，操作容易。
- 彈簧力較小，可避免小銑刀或鑽頭斷裂。
- 用研磨過的平行板 ，即可簡單設定。
- 平行度及各方面使用靈敏，且精度更好。

Accuracy ± 0.01mm

精度 ± 0.01mm

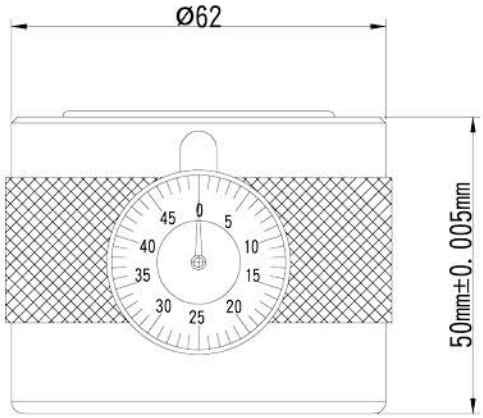

Code No. 型號	Type 規格	Height 高度 (mm)	G.W.Weight 重量 (KGS)	LxWxH	Magnetism 磁性
BTAPG845501A	ZH-50A	50.00±0.005	1.2	50×63×63	O

Tool Locking Device
鎖刀座

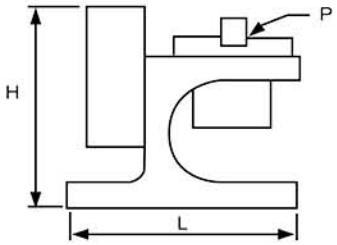

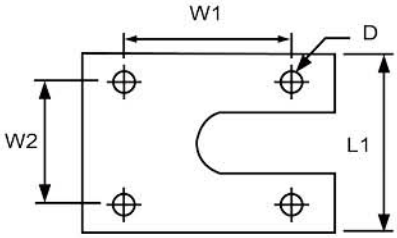

Code No. 型號	TYPE 規格	P	L	L1	H	W1	W2	D	Weight 重量 (kg)
BTTLD845101A	BT30	BT	145	103	143	112	72	13	4.2
BTTLD845102A	BT40	BT	145	103	143	112	72	13	4.2
BTTLD845103A	BT50	BT	177	135	205	140	100	13	7.6

Tool Locking Device A Type (Cast Iron Body)
鎖刀座　A型(主體為鑄鐵)

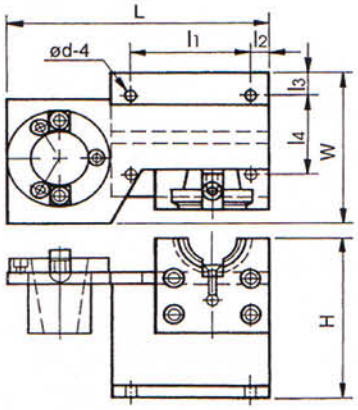

Code No. 型號	TYPE 規格	L	l1	l2	l3	l4	H	W	N.W. 淨重 (kg)	G.W. 毛重 (kg)	Shipment Size 裝箱尺寸 (cm)
BTTLD845151A	CP-BT30A	210	95	10	15	67	130	100	3.6	3.7	22×11.5×14
BTTLD845152A	CP-BT40A	210	95	10	15	67	130	100	3.7	3.9	22×11.5×14
BTTLD845153A	CP-BT50A	275	113	20	24	105	200	150	11	11.4	29.5×17×21
BTTLD845154A	CP-DIN40A	210	95	10	15	67	130	100	3.6	3.8	22×11.5×14
BTTLD845155A	CP-DIN50A	275	113	20	24	105	200	150	10.8	11.2	29.5×17×21
BTTLD845156A	CP-CAT40A	210	95	10	15	67	130	100	3.6	3.8	22×11.5×14
BTTLD845157A	CP-CAT50A	275	113	20	24	105	200	150	10.8	11.2	29.5×17×21

Taper Wiper BT Type
清潔棒　BT型

- Cleaning chips of taper wiper is made of lambskin.
  - It can clean inside slides of spindles to prevent static electricity and to extend the longevity of spindles and tapers.
    - 清潔棒的清潔片由小羊皮製成，可清理主軸內部， 不傷主軸，防止靜電產生，延長主軸使用壽命。

Code No. 型號	TYPE 規格	Taper 斜度	N.W. 淨重 (kg)	G.W. 毛重 (kg)	Shipment Size 裝箱尺寸 (cm)	Remarks(Pcs/Ctn) 備註 (支 / 箱)
BTSTT000101A	W-30	#30	0.06	0.08	41×29.5×20	30
BTSTT000102A	W-40	#40	0.07	0.10	41×29.5×20	30
BTSTT000103A	W-50	#50	0.16	0.20	41×29.5×20	10
BTSTT000104A	W-30P	#30	0.06	0.08	41×29.5×20	30
BTSTT000105A	W-40P	#40	0.07	0.10	41×29.5×20	30
BTSTT000106A	W-50P	#50	0.16	0.20	41×29.5×20	10

Taper Wiper HSK Type
清潔棒　HSK型

- Cleaning chips of taper wiper is made of lambskin.
  - It can clean inside slides of spindles to prevent static electricity and to extend the longevity of spindles and tapers.
    - 清潔棒的清潔片由小羊皮製成，可清理主軸內部， 不傷主軸，防止靜電產生，延長主軸使用壽命。

Code No. 型號	TYPE 規格	Model No. 型式	N.W. 淨重 (kg)	G.W. 毛重 (kg)	Shipment Size 裝箱尺寸 (cm)	Remarks(Pcs/Ctn) 備註 (支 / 箱)
BTSTT000201A	W-HSK40A	HSK40	0.08	0.10	41×29.5×20	30
BTSTT000202A	W-HSK50H	HSK50/HSK63F	0.08	0.12	41×29.5×20	10
BTSTT000203A	W-HSK63H	HSK63/HSK80F	0.10	0.13	41×29.5×20	10
BTSTT000204A	W-HSK100H	HSK100	0.54	0.7	41×29.5×20	3

NUT
螺帽

H Type

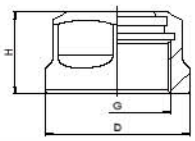

ER Hex

Code No. 型號	Spec. 規格	H	D	SW	G	Spanner No. 扳手編號
BB200ER11A001A	ER 11-H	11.5	19	17	M14×P0.75	BA2ER11020001A
BB200ER16A001A	ER 16-H	17.5	28	25	M22×P1.5	BA2ER16020001A
BB200ER20A001A	ER 20-H	19	34	30	M25×P1.5	BA2ER20020001A

B Type

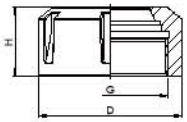

ER B

Code No. 型號	Spec. 規格	H	D	G	Spanner No. 扳手編號
BB200ER25B001A	ER 25-B	20	42	M32×P1.5	BA2ER25100001A
BB200ER32B001A	ER 32-B	24	50	M40×P1.5	BA2ER32100001A
BB200ER40B001A	ER 40-B	25	63	M50×P1.5	BA2ER40100001A
BB200ER50B001A	ER 50-B	35	78	M64×P2.0	BA2ER50100001A

S Type

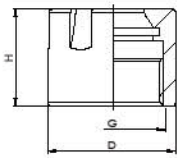

ER S

Code No. 型號	Spec. 規格	H	D	G	Spanner No. 扳手編號
BB200ER08S001A	ER 8-S	10.8	12	M10×P0.75	BE80SER08A
BB200ER11S001A	ER 11-S	12	16	M13×P0.75	BE80SER11A
BB200ER16S001A	ER 16-S	18	23	M19×P1.0	BE80SER16A
BB200ER20S001A	ER 20-S	19	28	M24×P1.0	BE80SER20A
BB200ER25S001A	ER 25-S	20	35	M30×P1.0	BE80SER25A

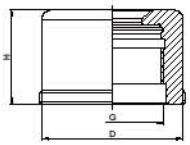

Code No. 型號	Spec. 規格	H	D	G	Spanner No. 扳手編號
BB200SK06D001A	SK 6	16.5	19.5	M15.5×P1.0	BE80DSK06A
BB200SK10D001A	SK10	20	30	M21.5×P1.0	BE80DSK10A
BB200SK16D001A	SK16	30	40	M32×P1.5	BE80DSK16A

Fig1

Fig2

Fig1

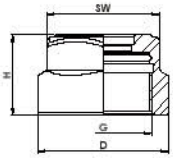

Fig2

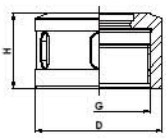

Code No. 型號	Spec. 規格	H	D	SW	G	Spanner No. 扳手編號	
						Fig1	Fig2
BB200SK06A001A	SK 6	15	19.5	18	M15.5×P1.0	BB200SK06A001A	-
BB200SK10A001A	SK10	17	29	25	M21.5×P1.0	BB200SK10A001A	-
BB200SK16A001A	SK16	24	40	36	M32×P1.5	BB200SK16A001A	-
BB200SK10C001A	SK10	17	29	-	M21.5xP1.0	-	BB200SK10C001A
BB200SK16C001A	SK16	24	40	-	M32xP1.5	-	BB200SK16C001A

ER Spanner
ER板手

ER 小徑板手 ER S

Code No. 型號	Spec. 規格	A	L
BE80SER08A	ER8S	13	75
BE80SER11A	ER11S	17	95
BE80SER16A	ER16S	22.5	118
BE80SER20A	ER20S	28	10
BE80SER25A	ER25S	36.5	135

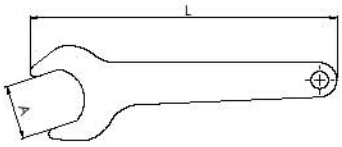

開口板手 ER Hex

Code No. 型號	Spec. 規格	A	L
BA2ER11020001A	ER11H	17	130
BA2ER16020001A	ER16H	25	140
BA2ER20020001A	ER20H	30	170

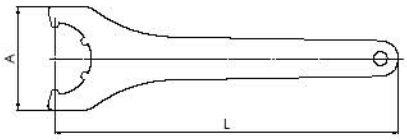

ER 標準板手 ER B

Code No. 型號	Spec. 規格	A	L
BA2ER25100001A	ER25B	65	210
BA2ER32100001A	ER32B	75	250
BA2ER40100001A	ER40B	90	290
BA2ER50100001A	ER50B	110	350

Hook Wrench
勾板手

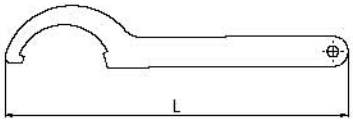

Code No. 型號	Spec. 規格	A	L
BA20C20030001A	C20	-	202
BA20C25030001A	C25	-	232
BA20C32030001A	C32	-	272
BA20C42030001A	C42	-	338

Optical Edge Finder
光電式尋邊器

- Quickly locate work edges and save time to find positions for Milling , Lathe Machine, and other machines.
- The scope of application includes processing material edge, and measuring inside and outside diameters of work-piece efficiently.
- There is a safety spring puller, which will put a ball precisely back to the position when ball breaks away from ball seat.
- Attached 2 dry batteries to tight the red lamp.
- 迅速的找出工作位置，對於銑床、車床、及其他機械設備，都能有效率節省尋找位置所需時間。
- 可應用於加工件邊及內、外徑之高效率量測。
- 當鋼珠脫離時，有一個安全彈簧可精確的將其拉回原來的 位置。
- 附 2 枚 1.5V 鹼性乾電池。

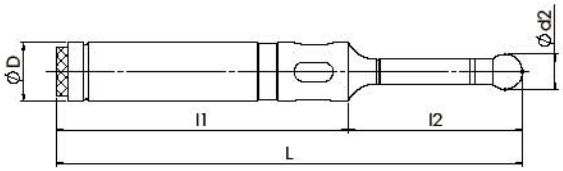

Code No. 型號	TYPE D 規格	d2	L	l1	l2
BTLEF846301A	20	10	158	108	50
BTLEF846302A	32	10	158	108	50

Chum Power

Vises System

虎鉗系統

F

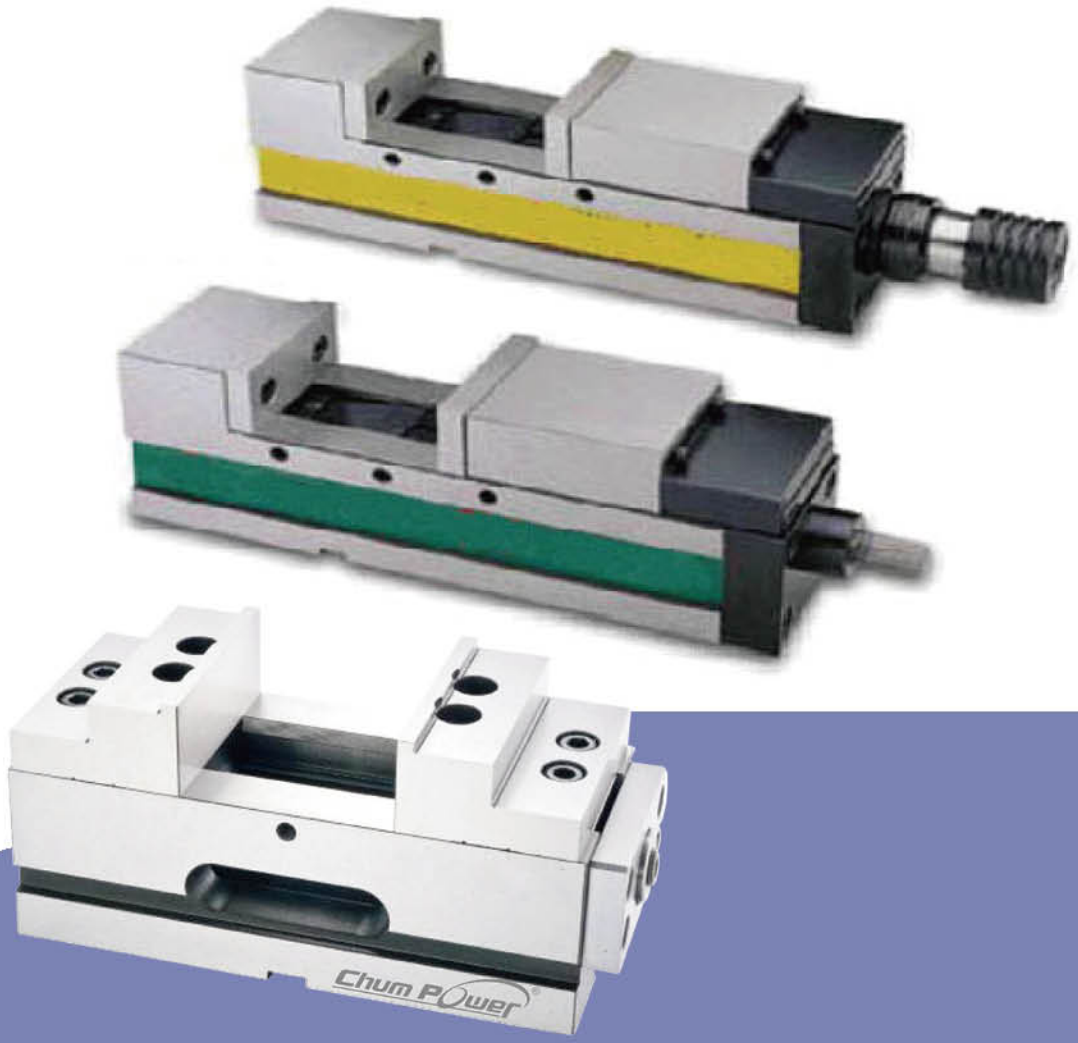

MC Hydraulic & Angle Lock Vise / MC Compact Vise

MODEL: HV

■ Feature / 特點

- One piece casting of vise bed and flexed jaw.
- Down thrust "Semis-sphere Segment" mechanism-eliminates jaw life and work tilt.
- Rigid material-vise body of ductile iron FCD60JIS (equal to GGG60) with 60 kgs/mm^2 or 80,000 psi tensile strength.
- Vise bed flame with harden treatment up to HRC 45° and up takes up wear and maintain for long.
- 本台及前端固定鉗口為一體成型鑄造，變形量少。
- 半圓球下壓角固機構可防止工件上浮並加強夾持緊度。
- 虎鉗材質使用球狀石墨鑄鐵 FCD60 (等同於 GGG60)，60 kgs/mm^2 或 80,000 psi 高抗張拉力，不易變形。
- 滑軌經高週波熱處理 HRC 45° ，可維持精度及延長耐磨。
- 同高定寸規格可搭配多台並列使用，適用於各式加工機作重切削及精密加工。
- 特殊虎口板可供選配。

Accuracy testing standard

NO	Item	JIS grade 1	Guaranteed
1	Vise side-lock on bottom slide way square.	0.020 100mm	0.010 100mm
2	Keyways on bottom of vise bed square to clamping surface of jaw plate.	0.020 100mm	0.015 100mm
3	Both jaw plate parallel.	0.020 100mm	0.020 100mm
4	Max opening test block parallel to bottom of vise body.	0.050 100mm	0.030 100mm
5	Top of rectangular test block clamped tightly by jaw parallel to bottom of vise body.	0.030 100mm	0.020 100mm
6	Surface of vise bed parallel to bottom of vise body.	0.020 100mm	0.015 100mm

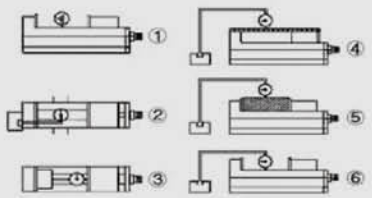

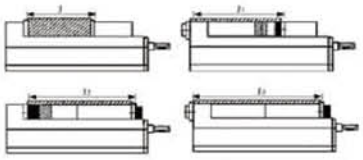

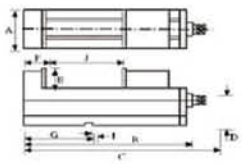

Hydraulic Type

Unit/mm

Code NO. 型號	Spec. 規格	A	B	C	D	E	F	G	I	Jaw Opening(Max.)				Clamping Force	Weight Body
										J	J1	J2	J3		
BTCAS5100110	HV-100V	101	380	480	85	48	80	125	16	135	200	240	330	4000 KGF	27 KGS
BTCAS5100210	HV-130V	131	445	545	95	55	85	150	18	190	250	300	390	5000 KGF	40 KGS
BTCAS5100310	HV-160V	161	535	635	105	58	100	165	18	250	330	370	480	5500 KGF	58 KGS
BTCAS5100410	HV-160VL	161	585	685	105	100	100	165	18	300	380	420	530	5500 KGF	62 KGS
BTCAS5100510	HV-200V	201	610	710	110	63	108	190	18	300	370	430	550	6900 KGF	81 KGS

Mechanical Type

Unit/mm

Code NO. 型號	Spec. 規格	A	B	C	D	E	F	G	I	Jaw Opening(Max.)				Weight Body
										J	J1	J2	J3	
BTCAS5200110	V-100V	101	380	440	85	48	80	125	16	135	200	240	330	26 KGS
BTCAS5200210	V-130V	131	445	505	95	55	85	150	18	190	250	300	390	39 KGS
BTCAS5200310	V-160V	161	535	595	105	58	100	165	18	250	330	370	480	59 KGS
BTCAS5200410	V-160VL	161	585	645	105	58	100	165	18	300	380	420	530	61 KGS
BTCAS5200510	V-200V	201	610	670	110	63	108	190	18	300	370	430	550	80 KGS

MC Mechanical Power Vise

MODEL: MV

■ Feature / 特點

- One piece casting of vise bed and flexed jaw.
- Down thrust "Semis-sphere Segment" mechanism-eliminates jaw life and work tilt.
- Rigid material-vise body of ductile iron FCD60JIS (equal to GGG60) with 60 kgs/mm^2 or 80,000 psi tensile strength.
- Vise bed flame with harden treatment up to HRC 45° and up takes up wear and maintain for long.

Paralleling

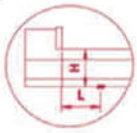

Angle Lock (prevent lifting)

Accuracy testing standard

NO	Item	JIS grade 1	Guaranteed
1	Vise side-lock on bottom slide way square.	0.020 100mm	0.010 100mm
2	Keyways on bottom of vise bed square to clamping surface of jaw plate.	0.020 100mm	0.015 100mm
3	Both jaw plate parallel.	0.020 100mm	0.020 100mm
4	Max opening test block parallel to bottom of vise body.	0.050 100mm	0.030 100mm
5	Top of rectangular test block clamped tightly by jaw parallel to bottom of vise body.	0.030 100mm	0.020 100mm
6	Surface of vise bed parallel to bottom of vise body.	0.020 100mm	0.015 100mm

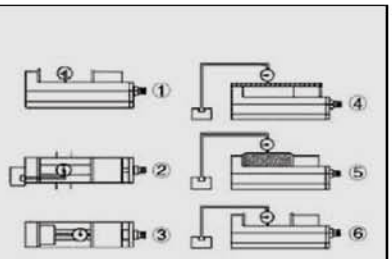

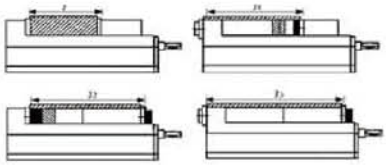

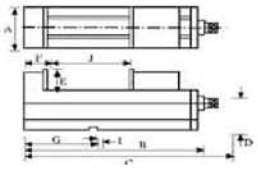

MC Mechanical Power Vise

Unit/mm

Code NO. 型號	Spec 規格	A	B	C	D	E	F	G	I	Jaw Opening(Max.)				Clamping Force	Weight Body
										J	J1	J2	J3		
BTCAS5300110	MV-100V	101	400	490	85	48,	80	125	16	155	200	240	330	3000 KGF	27 KGS
BTCAS5300210	MV-130V	131	465	555	95	55	85	150	18	230	250	300	390	3500 KGF	40 KGS
BTCAS5300310	MV-160V	161	555	645	105	58	100	165	18	300	330	370	480	4000 KGF	60 KGS
BTCAS5300410	MV-160VL	161	615	705	105	58	100	165	18	350	380	420	530	4000 KGF	62 KGS
BTCAS5300510	MV-200V	201	630	720	110	63	108	190	18	340	370	430	550	4500 KGF	81 KGS

Self Centring Vise
同動求心虎鉗: CV SERIES

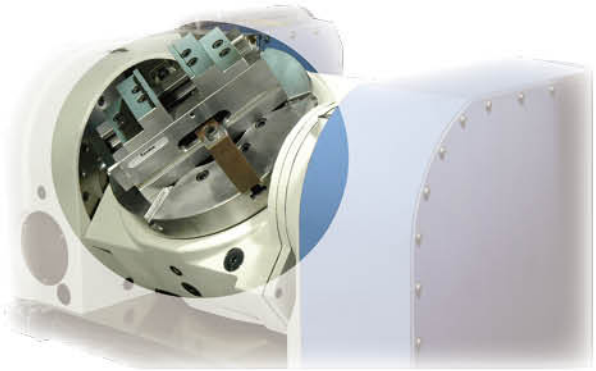

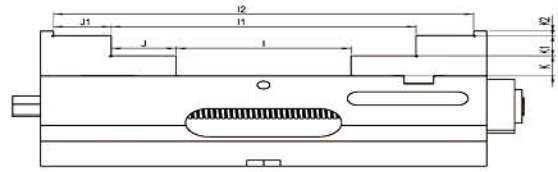

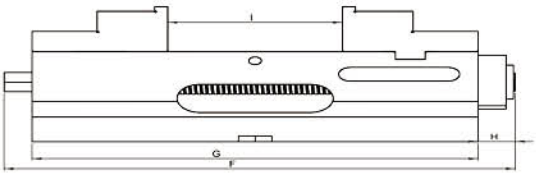

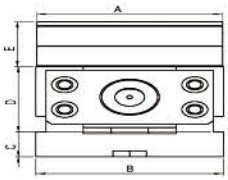

Code NO. 型號	Spec. 規格	A	B	C	D	E	F	G	H	I	I1	I2	J	J1	K	K1	K2
BTCAS5400110	CV-60	59	60	18	60	25	143	120	13	0-50	38-85	-	17.5	-	12.5	12.5	-
BTCAS5400210	CV-100	100	101	22	80	40	260	240	20	0-90	70-160	134-222	35	31	18	18	4
BTCAS5400310	CV-160	160	161		105	55	440	370	70	0-200	86-285	-	42.5	-	27.5	27.5	-

1. Self Centring Precision Vise is suitable for 4 and 5 Axis usage, either in horizontal or vertical machining.
2. Vise precision of its center repetition position is ±0.01 mm.
3. Using high quality cast iron FCD 60 (GGG 60). Slideway has high frequence heat treatness at HRC 45° or more to keep the accuracy and its long use life.
4. Vise hard jaw material Is full Steal and heat treatness at HRC 55° or more.
   Thanks for its good design to use both sides of jaw since it is exchangeable.
5. Special design for the Self Centring Precision Vise to prevent work piece from bending during clamping and machining. Thus, It has the best solution in clamping the work piece.

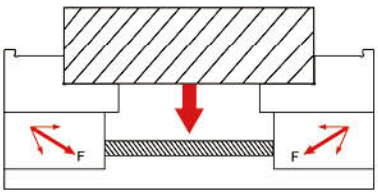

1. 同動式求心虎鉗適用四軸，五軸，立臥式 CNC 銑床之精密加工。
2. 虎鉗中心重覆定位精度可保持 ±0.01mm。
3. 虎鉗本體材質使用球狀石墨鑄鐵 FCD60 (GGG60)，滑軌經高週波熱處理 HRC45° 以上，可保持高耐磨性。
4. 虎鉗鉗口採用全鋼材質，經熱處理硬度高達 HRC55° 以上，可拆換方向使用，變化性與互換性極佳。
5. 虎鉗特殊的結構設計，夾持工件時所產生的下壓力能有效防止工件上浮情形，鎖固力極佳。

夾持曲線圖
（CLAMPING CURVE）

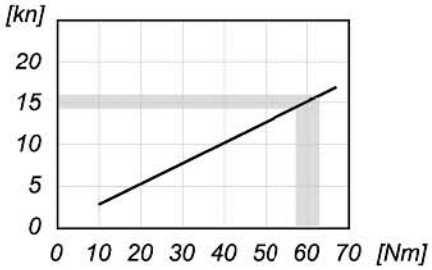

Self Centring Vise
同動求心虎鉗: CVR SERIES

Code NO. BTCAS5500110
Spec CVR-90

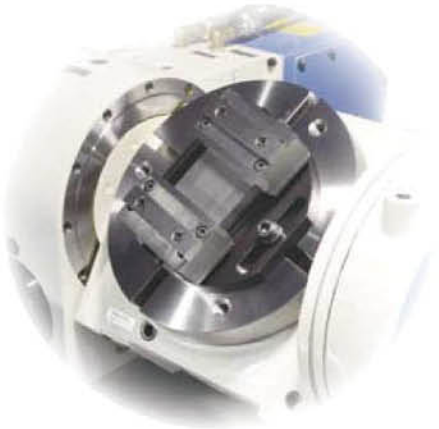

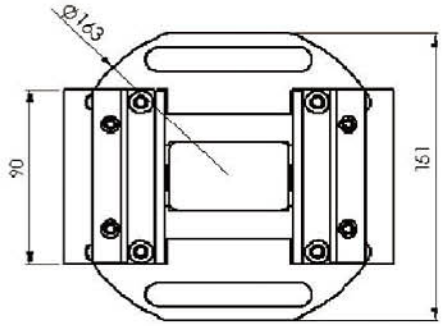

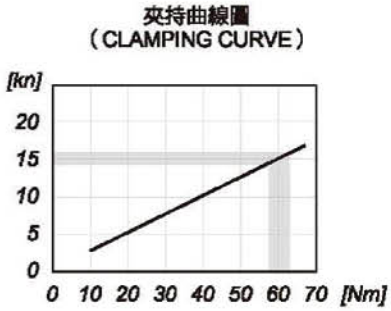

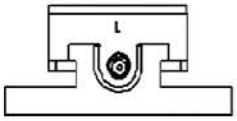

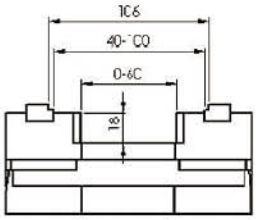

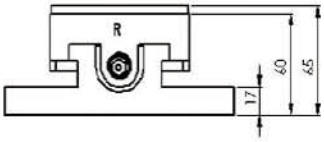

1. Self Carting Precision Vise is suitable for 4 and 5 Axis CNC Rotary Table usage, either in horizontal pr vertical machining.
2. Vise precision of its center repetition position is ±0.01mm.
3. Using high quality alloy steel, slipway has high frequence heat greatness at HRC 45° or more to keep the accuracy and its long use life.
4. Vise hard jaw material is full steel and heat greatness at HRC 55 ° or more, owing to its good design to use both sides of jaw since it is exchangeable.
5. Special design for the Self Centering Precision Vise to prevent work piece from bending during clamping and machining, thus,It has the best solution in clamping the work piece.

1. 同動式求心虎鉗適用四軸、五軸、CNC 分度盤、立臥式 CNC 銑床之精密加工。
2. 虎鉗中心重覆定位精度可保持 ± 0.01mm。
3. 虎鉗本體材質使用合金鋼，滑軌經高週波熱處理 HRC 45° 以上，可保持高耐磨性。
4. 虎鉗鉗口採用全鋼材質，經熱處理硬度高達 HRC 55° 以上，可拆換方向使用，變化性與互換性極佳。
5. 虎鉗特殊的結構設計，夾持工件時所產生的下壓力能有效防止 工件上浮情形，鎖固力極佳。

Chum Power

Angle Head

橫向銑頭

G

Feature
產品特色

- Customized setting blocks can be rasily installed without any mondification of machine construction.
- The body is made of Ductile Casr Iron with high tensile strength.
- Can be automatic tool changed. Save time; increase efficiency.
- Cutting direction can be adjusted from 0 to 360 degree. Can easily be set by indicating the datum face.
- Precision P4 Class bearing provides accurate concentricity.
- Low tenoerature rising, waterproof, oil-proof, and dust-proof.
- Avoids turning workpiece around to increase accuracy and productivity.
- Ideal for drilling, tapping, end milling, face milling and various machining applications.

- 定位塊安裝簡易，無需更改機台結構。
- 本體材質為球狀石墨鑄鐵，抗拉強度高。
- 可於刀庫自動換刀，節省時間，效率高。
- 可 360 度旋轉調整加工角度，可透過兩側研磨平行面，簡單校正加工方向。
- 使用 P4 級軸承，確保高精度。
- 溫升小、防水、防油級防塵。
- 減少翻動工件，提高加工工件精度及生產力。
- 多功能用途，適用鑽孔、攻牙、端銑、面銑 ... 等加工，加工適用範圍大。

Application
加工範例

Internal Machining
內面加工

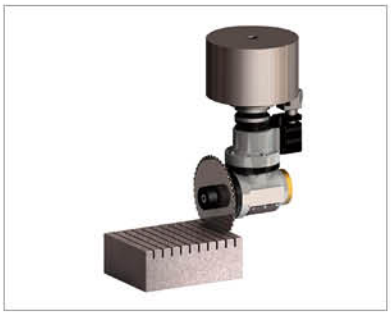

Saw and Cutting
鉅切加工

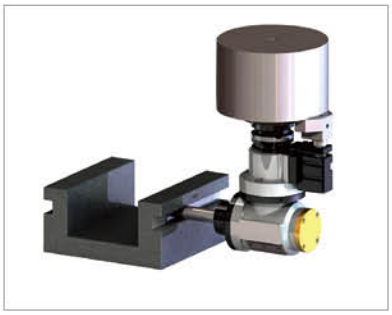

Side Machining
側面加工

Any Angle Machining
任意角度加工

Curved Surface Machining
曲面加工

45 Degree Machining
45° 角加工

CPA Type

90°橫向銑頭　90°Angle Head-ER

- The body is made of Ductile Cast Iron. High strength steel; stable machining.
- Wide selections of tool shanks. The design of ER32, ER40, and FA25.4 heads ensures various applications.
- Can be automatic tool changed. Increases productivity.
- Suitable for light and middle cutting.
- 本體採用球狀石墨鑄鐵，剛性強，加工穩定。
- 適用主軸種類多樣化。夾持刀具種類、尺寸多樣化，ER32、ER40、FA25.4 型式，可涵蓋大部分加工應用。
- 自動刀庫換刀加工 ，量化生產必備工具。
- 適用中、輕切削。

內孔偏擺度	0.002 mm
材質	球狀石墨鑄鐵
轉速	最高 4000 RPM
扭力	最大 27Nm
傳輸比	1:0.81
適用主軸	BT, NT, SK(ISO), CAT
標準配件	鉤形扳手、ER 扳手、ER 螺帽
出力軸轉向	反轉

Run out	0.002 mm
Material	Ductile Cast Iron
R.P.M.	Max. 4000 RPM
Torque	Max. 27Nm
Gear Ratio	1:0.81
Spindle Type	BT, NT, SK(ISO), CAT
Standard Accessory	Hook Spanner ER Wrench, ER Nut
Output Rotation	Reverse to Input Rotation

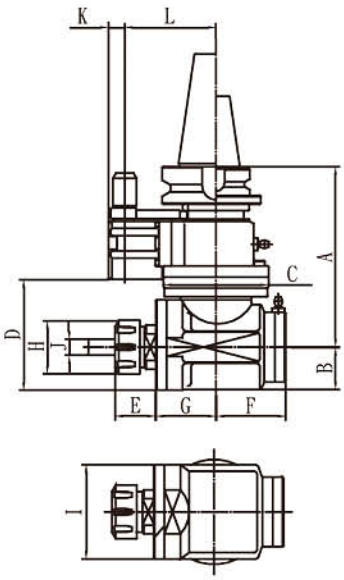

Unit/mm

Code NO. 型號	TYPE 規格	A	B	C	D	E	F	G	H	I	J	K	L	N.W.(KG)
BTCPA0100010	BT40-ER32	160	40	98	103	39	65	56	50	88	3~20	15	65/80/85	7.8
BTCPA0100020	BT50-ER32	171	40	98	103	39	65	56	50	88	3~20	15	80/85/110	9.5
BTCPA0100030	BT40-ER40	160	40	98	103	44	65	56	63	88	4~26	15	65/80/85	7.8
BTCPA0100040	BT50-ER40	171	40	98	103	44	65	56	63	88	4~26	15	80/85/110	9.5
BTCPA0100050	NT50-ER32	171	40	98	103	39	65	56	50	88	3~20	15	80/85/110	9.5
BTCPA0100060	NT50-ER40	171	40	98	103	44	65	56	63	88	4~26	15	80/85/110	9.5
BTCPA0100070	SK40-ER32	160	40	98	103	39	65	56	50	88	3~20	15	65/80/85	7.8
BTCPA0100080	SK50-ER32	171	40	98	103	39	65	56	50	88	3~20	15	80/85/110	9.5
BTCPA0100090	SK40-ER40	160	40	98	103	44	65	56	63	88	4~26	15	65/80/85	7.8
BTCPA0100100	SK50-ER40	171	40	98	103	44	65	56	63	88	4~26	15	80/85/110	9.5
BTCPA0100110	CAT40-ER32	160	40	98	103	39	65	56	50	88	3~20	15	65/80/85	7.8
BTCPA0100120	CAT50-ER32	171	40	98	103	39	65	56	50	88	3~20	15	80/85/110	9.5
BTCPA0100130	CAT40-ER40	160	40	98	103	44	65	56	63	88	4~26	15	65/80/85	7.8
BTCPA0100140	CAT50-ER40	171	40	98	103	44	65	56	63	88	4~26	15	80/85/110	9.5

CPA Type

90°橫向銑頭　90°Angle Head-FA

- The body is made of Ductile Cast Iron. High strength steel; stable machining.
- Wide selections of tool shanks. The design of ER32, ER40, and FA25.4 heads ensures various applications.
- Can be automatic tool changed. Increases productivity.
- Suitable for light and middle cutting.
- 本體採用球狀石墨鑄鐵，剛性強，加工穩定。
- 適用主軸種類多樣化。夾持刀具種類、尺寸多樣化，ER32、ER40、FA25.4 型式，可涵蓋大部分加工應用。
- 自動刀庫換刀加工，量化生產必備工具。
- 適用中、輕切削。

內孔偏擺度	0.002 mm
材質	球狀石墨鑄鐵
轉速	最高 4000 RPM
扭力	最大 27Nm
齒輪比	1:0.81
適用主軸	BT, NT, SK(ISO), CAT
標準配件	開口扳手
出力軸轉向	反轉

Run out	0.002 mm
Maferial	Ductile Cast Iron
R.P.M.	Max. 4000 RPM
Torque	Max. 27Nm
Gear Ra	1:0.81
Spindle Type	BT, NT, SK(ISO), CAT
Standard Accessory	Open End Wrencht
Output Rotation	Reverse to Input Rotation

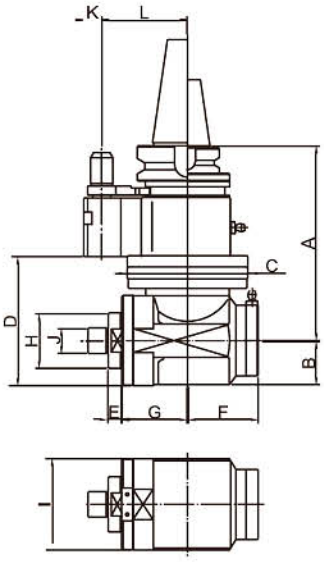

Unit/mm

Code NO. 型號	TYPE 規格	A	B	C	D	E	F	G	H	I	J	K	L	N.W.(KG)
BTCPA0200010	BT40-FA25.4	160	40	98	103	12	65	56	50	88	25.4	15	65/80/85	7.8
BTCPA0200020	BT50-FA25.4	171	40	98	103	12	65	56	50	88	25.4	15	80/85/110	9.5
BTCPA0200030	NT50-FA25.4	171	40	98	103	12	65	56	50	88	25.4	15	80/85/110	9.5
BTCPA0200040	SK40-FA25.4	160	40	98	103	12	65	56	50	88	25.4	15	65/80/85	7.8
BTCPA0200050	SK50-FA25.4	171	40	98	103	12	65	56	50	88	25.4	15	80/85/110	9.5
BTCPA0200060	CAT40-FA25.4	160	40	98	103	12	65	56	50	88	25.4	15	65/80/85	7.8
BTCPA0200070	CAT50-FA25.4	171	40	98	103	12	65	56	50	88	25.4	15	80/85/110	9.5

CPB Type

90°橫向銑頭　90°Angle Head-BT

- The body is made of Ductile CastIron. High strength steel; stable machining.
- The output interface of BT30 ensures wide-range application with various BT30 tool holders.
- Can be automatic tool changed. Increases productivity.
- 本體採用球狀石墨鑄鐵，剛性強，加工穩定。
- BT30 刀具接合介面，提供各種 BT30 刀具之彈性應用，涵蓋大部份加工應用。
- 自動刀庫換刀加工，量化生產必備工具。

內孔偏擺度	0.002 mm
材質	球狀石墨鑄鐵
轉速	最高 4000 RPM
扭力	最大 47Nm
齒輪比	1:1
適用主軸	BT, SK(ISO), CAT
標準配件	鉤形扳手、ER 扳手、ER 螺帽
出力軸轉向	反轉

Run out	0.002 mm
Material	Ductile Cast Iron
R.P.M.	Max. 4000 RPM
Torque	Max. 47Nm
Gear Ratio	1:1
Spindle Type	BT, SK(ISO), CAT
Standard Accessory	Hook Spanner Open End Wrench,BT Nut
Output Rotation	Reverse to Input Rotation

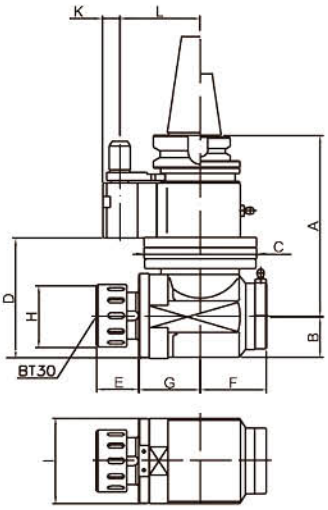

Unit/mm

Code NO. 型號	TYPE 規格	A	B	C	D	E	F	G	H	I	K	L	N.W.(KG)
BTCPB0300010	BT40-BT30	192	44.5	120	127.5	45	70	65	66	90	17	70/80/85	12.1
BTCPB0300020	BT50-BT30	195	44.5	120	127.5	45	70	65	66	90	17	80/85/110	14.7
BTCPB0300030	SK40-BT30	192	44.5	120	127.5	45	70	65	66	90	17	70/80/85	12.1
BTCPB0300040	SK50-BT30	195	44.5	120	127.5	45	70	65	66	90	17	80/85/110	14.7
BTCPB0300050	CAT40-BT30	192	44.5	120	127.5	45	70	65	66	90	17	70/80/85	12.1
BTCPB0300060	CAT50-BT30	195	44.5	120	127.5	45	70	65	66	90	17	80/85/110	14.7

CPB Type

90°橫向銑頭　90°Angle Head-ER

- The body is made of Ductile Cast Iron. High strength steel; stable machining.
- Can be automatic tool changed. Increases productivity.
- 本體採用球狀石墨鑄鐵，剛性強，加工穩定。
- 自動刀庫換刀加工，量化生產必備工具。

內孔偏擺度	0.002 mm
材質	球狀石墨鑄鐵
轉速	最高 4000 RPM
扭力	最大 47Nm
齒輪比	1:1
適用主軸	BT, SK(ISO), CAT
標準配件	鉤形扳手、ER 扳手、ER 螺帽
出力軸轉向	反轉

Run out	0.002 mm
Material	Ductile Cast Iron
R.P.M.	Max. 4000 RPM
Torque	Max. 47Nm
Gear Ratio	1:1
Spindle Type	BT, SK(ISO), CAT
Standard Accessory	Hook Spanner ER Wrench, ER Nut
Output Rotation	Reverse to Input Rotation

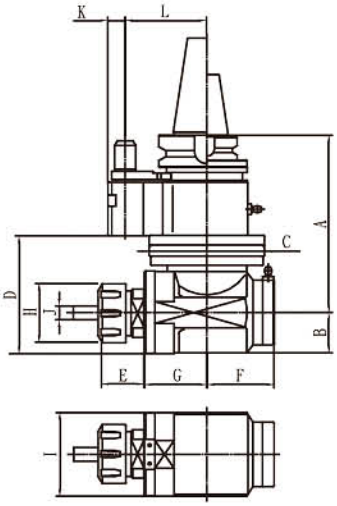

Unit/mm

Code NO. 型號	TYPE 規格	A	B	C	D	E max	F	G	H	I	J	K	L	N.W.(KG)
BTCPB0100010	BT40-ER40	192	44.5	120	127.5	44	70	65	63	90	4~26	17	70/80/85	12.1
BTCPB0100020	BT50-ER40	195	44.5	120	127.5	44	70	65	63	90	4~26	17	80/85/110	14.7
BTCPB0100030	SK40-ER40	192	44.5	120	127.5	44	70	65	63	90	4~26	17	70/80/85	12.1
BTCPB0100040	SK50-ER40	195	44.5	120	127.5	44	70	65	63	90	4~26	17	80/85/110	14.7
BTCPB0100050	CAT40-ER40	192	44.5	120	127.5	44	70	65	63	90	4~26	17	70/80/85	12.1
BTCPB0100060	CAT50-ER40	195	44.5	120	127.5	44	70	65	63	90	4~26	17	80/85/110	14.7

CPC Type

90°橫向銑頭　90°Angle Head-FA

- The body is made of Ductile Cast Iron. High strength steel; stable machining.
- The AHC series is suitable for firm and fast face milling.
- Can be automatic tool changed . Increases productivity.
- 本體採用球狀石墨鑄鐵，剛性強，加工穩定。
- 面銑刀專用機種，直接連結面銑刀，加工穩定快速。
- 自動刀庫換刀加工，量化生產必備工具。

內孔偏擺度	0.002 mm
材質	球狀石墨鑄鐵
轉速	最高 4000 RPM
扭力	最大 47 Nm
齒輪比	1:1
適用主軸	BT, SK(ISO), CAT
標準配件	開口 ER 扳手
出力軸轉向	反轉

Run-out	0.002 mm
Material	Ductile Cast Iron
R.P.M.	Max. 4000 RPM
Torque	Max. 47 Nm
Gear Ratio	1:1
Spindle Type	BT, SK(ISO), CAT
Standard Accessory	Open End Wrench
Output Rotation	Reverse to Input Rotation

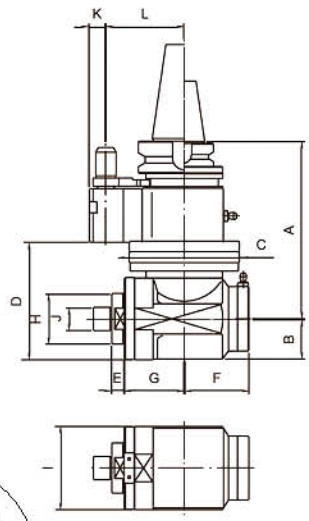

Unit/mm

Code NO. 型號	TYPE 規格	A	B	C	D	E	F	G	H	I	J	K	L	N.W.(KG)
BTCPC0200010	BT40-FA25.4	192	44.5	120	127.5	13.5	70	65	55	90	25.4	17	70/80/85	12.1
BTCPC0200020	BT50-FA25.4	195	44.5	120	127.5	13.5	70	65	55	90	25.4	17	80/85/110	14.7
BTCPC0200030	SK40-FA25.4	192	44.5	120	127.5	13.5	70	65	55	90	25.4	17	70/80/85	12.1
BTCPC0200040	SK50-FA25.4	195	44.5	120	127.5	13.5	70	65	55	90	25.4	17	80/85/110	14.7
BTCPC0200050	CAT40-FA25.4	192	44.5	120	127.5	13.5	70	65	55	90	25.4	17	70/80/85	12.1
BTCPC0200060	CAT50-FA25.4	195	44.5	120	1275	13.5	70	65	55	90	25.4	17	80/85/110	14.7

CPD Type

加長型橫向銑頭 Modular Angle Head-Longer

- The body is made of Ductile Cast Iron. High strength steel; stable machining.
- The AHC series is suitable for rm and fast face milling.
- Can be automatic tool changed. Increases productivity.
- 小型化設計、加長型下座，適用於深槽與深孔之內面加工。
- 自動刀庫換刀加工，量化生產必備工具。

內孔擺擺度	0.002 mm
材質	球狀石墨鑄鐵
轉速	最高 4000 RPM
扭力	最大 15Nm
齒輪比	1:1
適用主軸	BT, SK(ISO), CAT
標準配件	鉤形扳手、ER 扳手、ER 螺帽
出力軸轉向	反轉

Run out	0.002 mm
Material	Ductile Cast Iron
R.P.M.	Max. 4000 RPM
Torque	Max. 15 Nm
Gear Ratio	1:1
Spindle Type	BT, SK(ISO), CAT
Standard Accessory	Hook Spanner, ER Wrench, ER Nut
Output Rotation	Reverse to Input Rotation

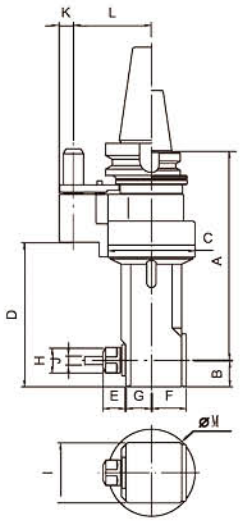

Unit/mm

Code NO. 型號	TYPE 規格	A	B	C	D	E max	F	G	H	I	J	K	L	M	N.W.(KG)
BTCPD0400010	BT40-A1	227	29	95	156	38	38	28	34	66	1~13(ER20)	15.5	65/80/85	116	8.4
BTCPD0400020	BT50-A1	238	29	95	156	38	38	28	34	66	1~13(ER20)	15.5	80/85/110	116	11
BTCPD0400030	SK40-A1	227	29	95	156	38	38	28	34	66	1~13(ER20)	15.5	65/80/85	116	8.1
BTCPD0400040	SK50-A1	238	29	95	156	38	38	28	34	66	1~13(ER20)	15.5	80/85/110	116	10.8
BTCPD0400050	CAT40-A1	227	29	95	156	38	38	28	34	66	1~13(ER20)	15.5	65/80/85	116	8.1
BTCPD0400060	CAT50-A1	238	29	95	156	38	38	28	34	66	1~13(ER20)	15.5	80/85/110	116	10.8
BTCPD0400070	BT40-A3	227	29	95	156	47	38	28	42	66	2~16(ER25)	15.5	65/80/85	125	8.4
BTCPD0400080	BT50-A3	238	29	95	156	47	38	28	42	66	2~16(ER25)	15.5	80/85/110	125	11
BTCPD0400090	SK40-A3	227	29	95	156	47	38	28	42	66	2~16(ER25)	15.5	65/80/85	125	8.1
BTCPD0400100	SK50-A3	238	29	95	156	47	38	28	42	66	2~16(ER25)	15.5	80/85/110	125	10.8
BTCPD0400110	CAT40-A3	227	29	95	156	47	38	28	42	66	2~16(ER25)	15.5	65/80/85	125	8.1
BTCPD0400120	CAT50-A3	238	29	95	156	47	38	28	42	66	2~16(ER25)	15.5	80/85/110	125	10.8

* 此系列橫銑頭可選購延長器，以增加本體長度，詳細規格請見 P148。
* For longer length, Extension is available, whose speci cation is shown on P148.

CPD Type

小型橫向銑頭 Modular Angle Head-Compact

- Compact body design is the best tool for internal machining application.
- Can be automatic tool changed. Increases productivity.
- 小型化外部設計，內面加工的最佳選擇。
- 自動刀庫換刀加工，量化生產必備工具。

內孔偏擺度	0.002 mm
材質	球狀石墨鑄鐵
轉速	最高 4000 RPM
扭力	最大 15 Nm
齒輪比	1:1
適用主軸	BT, SK(ISO), CAT
標準配件	鉤形扳手、ER 扳手、ER 螺帽
出力軸轉向	反轉

Run out	0.002 mm
Material	Ductile Cast Iron
R.P.M.	Max. 4000 RPM
Torque	Max. 15 Nm
Gear Ratio	1:1
Spindle Type	BT, SK(ISO), CAT
Standard Accessory	Hook Spanner, ER Wrench, ER Nut
Output Rotation	Reverse to Input Rotation

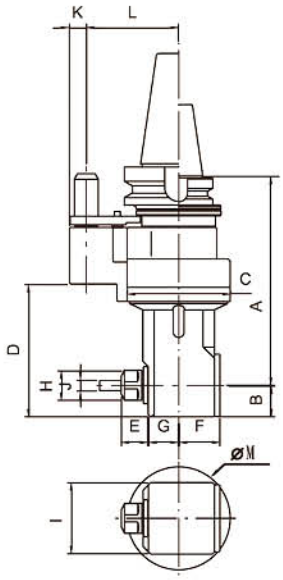

Unit/mm

Code NO. 型號	TYPE 規格	A	B	C	D	E max	F	G	H	I	J	K	L	M	N.W.(KG)
BTCPD0500010	BT40-A2	192	29	95	122	38	38	28	34	66	1~13(ER20)	15.5	65/80/85	116	7.2
BTCPD0500020	BT50-A2	203	29	95	122	38	38	28	34	66	1~13(ER20)	15.5	80/85/110	116	10
BTCPD0500030	SK40-A2	192	29	95	122	38	38	28	34	66	1~13(ER20)	15.5	65/80/85	116	6.9
BTCPD0500040	SK50-A2	203	29	95	122	38	38	28	34	66	1~13(ER20)	15.5	80/85/110	116	9.8
BTCPD0500050	CAT40-A2	192	29	95	122	38	38	28	34	66	1~13(ER20)	15.5	65/80/85	116	6.9
BTCPD0500060	CAT50-A2	203	29	95	122	38	38	28	34	66	1~13(ER20)	15.5	80/85/110	116	9.8
BTCPD0500070	BT40-A4	192	29	95	122	47	38	28	42	66	2~16(ER25)	15.5	65/80/85	125	7.2
BTCPD0500080	BT50-A4	203	29	95	122	47	38	28	42	66	2~16(ER25)	15.5	80/85/110	125	10
BTCPD0500090	SK40-A4	192	29	95	122	47	38	28	42	66	2~16(ER25)	15.5	65/80/85	125	6.9
BTCPD0500100	SK50-A4	203	29	95	122	47	38	28	42	66	2~16(ER25)	15.5	80/85/110	125	9.8
BTCPD0500110	CAT40-A4	192	29	95	122	47	38	28	42	66	2~16(ER25)	15.5	65/80/85	125	6.9
BTCPD0500120	CAT50-A4	203	29	95	122	47	38	28	42	66	2~16(ER25)	15.5	80/85/110	125	9.8

* 此系列橫銑頭可選購延長器，以增加本體長度，詳細規格請見 p148。
*For longer length, Extension is available, whose speci cation is shown on p148.

CPD Type

45°橫向銑頭　Modular Angle Head-45°

- The 45 degree design ensures 45 degree drilling, milling and curved surface processing.
- Can be automatic tool changed . Increases productivity.
- 45° 設計，適用於 45° 鑽銑加工與曲面加工等。
- 自動刀庫換刀加工，量化生產必備工具。

內孔偏擺度	0.002 mm
材質	球狀石墨鑄鐵
轉速	最高 4000 RPM
扭力	最大 15Nm
齒輪比	1:1
適用主軸	BT, SK(ISO), CAT
標準配件	鉤形扳手、ER 扳手、ER 螺帽
出力軸轉向	反轉

Run out	0.002 mm
Material	Ductile Cast Iron
R.P.M.	Max. 4000 RPM
Torque	Max. 15 Nm
Gear Ratio	1:1
Spindle Type	BT, SK(ISO), CAT
Standard Accessory	Hook Spanner, ER Wrench, ER Nut
Output Rotation	Reverse to Input Rotation

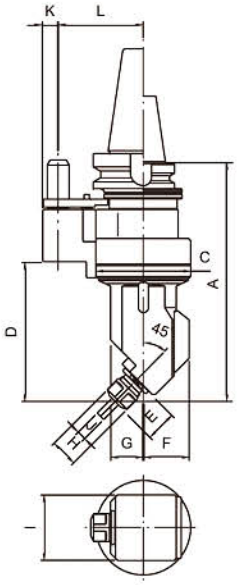

Unit/mm

Code NO. 型號	TYPE 規格	A	C	D	E	F	G	H	I	J	K	L	N.W.(KG)
BTCPD0600010	BT40-B1	238	95	139	30	46	33	34	66	1~13(ER20)	15.5	65/85/80	7.4
BTCPD0600020	BT50-B1	249	95	139	30	46	33	34	66	1~13(ER20)	15.5	80/85/110	10.2
BTCPD0600030	SK40-B1	238	95	139	30	46	33	34	66	1~13(ER20)	15.5	65/85/80	7.1
BTCPD0600040	SK50-B1	249	95	139	30	46	33	34	66	1~13(ER20)	15.5	80/85/110	10
BTCPD0600050	CAT40-B1	238	95	139	30	46	33	34	66	1~13(ER20)	15.5	65/85/80	7.1
BTCPD0600060	CAT50-B1	249	95	139	30	46	33	34	66	1~13(ER20)	15.5	80/85/110	10

* 此系列橫銑頭可選購延長器，以增加本體長度，詳細規格請見 P148。

* For longer length, Extension is available, whose speci cation is shown on P148.

CPG Type

萬向銑頭 Universal Angle Head

- Cutting angle can be set from 0 to ±90 degree for various applications.
- Compact design provides extra strength, oil-proof, dust-proof, and duration.
- Can be automatic tool changed. Increases productivity.
- 0° ~± 90° 加工角度多樣化，適用於各種加工應用。
- 小型化設計、剛性高、防油、防塵佳、使用壽命長。
- 自動刀庫換刀加工，量化生產必備工具。

內孔偏擺度	0.002 mm
材質	合金鋼 & 球狀石墨鑄鐵
轉速	最高 4000 RPM
扭力	最大 20 Nm
齒輪比	1:1
適用主軸	BT, SK(ISO), CAT
標準配件	開口扳手、ER 扳手、ER 螺帽
出力軸轉向	反轉

Run-out	0.002 mm
Material	Alloy Steel & Ductile Cast Iron
R.P.M.	Max. 4000 RPM
Torque	Max. 20 Nm
Gear Ratio	1:1
Spindle Type	BT, SK(ISO), CAT
Standard Accessory	Open End Wrench, ER Wrench, ER Nut
Output Rotation	Reverse to Input Rotation

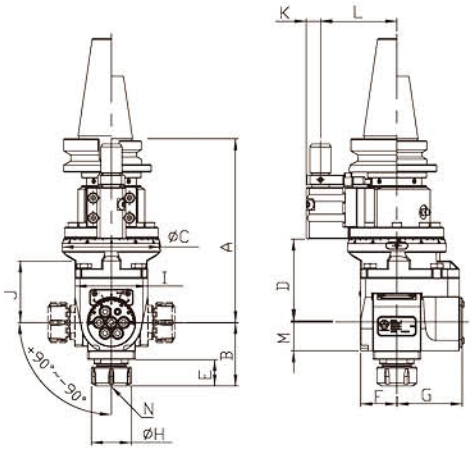

Unit/mm

Code NO. 型號	TYPE 規格	A	B max	C	D	E max	F	G	H	I	J	K	L	M	N	N.W.(KG)
BTCPD0700010	BT40-A1	184.5	89	103	87.6	32	38	70.7	42	76	64.5	17	65/80/85	29.5	2~16 (ER25)	9
BTCPD0700020	BT50-A1	195.5	89	103	87.6	32	38	70.7	42	76	64.5	17	80/85/110	29.5	2~16 (ER25)	11.5
BTCPD0700030	SK40-A1	184.5	89	103	87.6	32	38	70.7	42	76	64.5	17	65/80/85	29.5	2~16 (ER25)	9
BTCPD0700040	SK50-A1	195.5	89	103	87.6	32	38	70.7	42	76	64.5	17	80/85/110	29.5	2~16 (ER25)	11.5
BTCPD0700050	CAT40-A1	184.5	89	103	87.6	32	38	70.7	42	76	64.5	17	65/80/85	29.5	2~16 (ER25)	9
BTCPD0700060	CAT50-A1	195.5	89	103	87.6	32	38	70.7	42	76	64.5	17	80/85/110	29.5	2~20 (ER25)	11.5

CPK Type

鎖固式橫向銑頭 Heavy Duty Angle Head

- The output interface of BT40 ensures wide- range application with various BT40 tool holders.
- Mount directly on the machine spindle surface. Rugged body construction for heavy duty cutting.
- Interchangeable among same taper machines by changing the mounting plate.
- Hardened precision spiral bevel gears ensure stable performance with long service life.
- Cutting direction can be adjusted from 0 ~ 360 degree.
- BT40 刀具接合介面，提供各種 BT40 刀具之彈性應用，涵蓋大部分加工應用。
- 直接安裝於機台法蘭面。本體設計簡約，結構堅固。
- 藉由更換法蘭盤，可於相同錐度之各式機台上交替使用。
- 採用高硬度高精密螺旋傘齒輪，運轉穩定，壽命長。
- 可 360 度旋轉調整加工角度。

內孔偏擺度	0.002 mm
材質	球狀石墨鑄鐵
轉速	最高 4000 RPM
扭力	最大 100Nm
齒輪比	1:1
適用主軸	BT, SK(ISO), CAT
標準配件	開口扳手、L 型扳手
出力軸轉向	反轉

Run out	0.002 mm
Material	Ductile Cast Iron
R.P.M.	Max. 4000 RPM
Torque	Max. 100 Nm
Gear Ratio	1:1
Spindle Type	BT, SK(ISO), CAT
Standard Accessory	Open End Wrench, L Type Wrench
Output Rotation	Reverse to Input Rotation

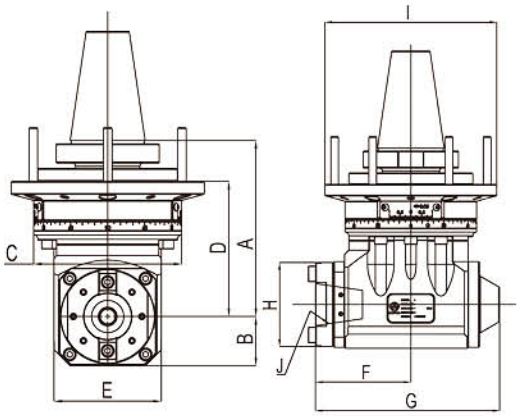

Unit/mm

Code NO. 型號	TYPE 規格	A	B	C	D	E	F	G	H	I	J	N.W.(KG)
BTCPD0800010	BT40-A1G	164	46	138	126	100	100	193	88	180	BT40	17.3
BTCPD0800020	BT50-A1G	164	46	138	126	100	100	193	88	180	BT40	20
BTCPD0800030	SK40-A1G	164	46	138	126	100	100	193	88	180	BT40	17.3
BTCPD0800040	SK50-A1G	164	46	138	126	100	100	193	88	180	BT40	20
BTCPD0800050	CAT40-A1G	164	46	138	126	100	100	193	88	180	BT40	17.3
BTCPD0800060	CAT50-A1G	164	46	138	126	100	100	193	88	180	BT40	20

CPK Type

鎖固式橫向銑頭 Heavy Duty Angle Head-Longer

- The output interface of BT40 ensures wide- range application with various BT40 tool holders.
- Mount directly on the machine spindle surface. Rugged body construction for heavy duty cutting.
- Interchangeable among same taper machines by changing the mounting plate.
- Hardened precision spiral bevel gears ensure stable performance with long service life.
- Cutting direction can be adjusted from 0 ~ 360 degree.
- 錐度 40 刀具接合介面，提供各種 BT40 刀具之彈性應用，涵蓋大部分加工應用。
- 直接安裝於機台法蘭面。本體設計簡約 , 結構堅固。
- 藉由更換法蘭盤，可於相同錐度之各式機台上交替使用。
- 採用高硬度高精密螺旋傘齒輪，運轉穩定，壽命長。
- 可 360 度旋轉調整加工角度。

內孔偏擺度	0.002 mm
材質	球狀石墨鑄鐵
轉速	最高 4000 RPM
扭力	最大 100 Nm
齒輪比	1:1
適用主軸	BT, SK(ISO), CAT
標準配件	開口扳手、L 型扳手
出力軸轉向	反轉

Run out	0.002 mm
Material	Ductile Cast Iron
R.P.M.	Max. 4000 RPM
Torque	Max. 100 Nm
Gear Ratio	1:1
Spindle Type	BT, SK(ISO), CAT
Standard Accessory	Open End Wrench, L Type Wrench
Output Rotation	Reverse to Input Rotation

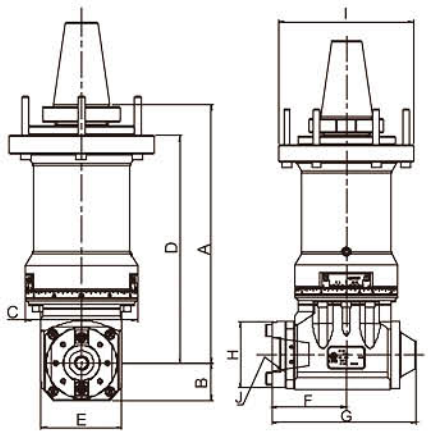

Unit/mm

Code NO. 型號	TYPE 規格	A	B	C	D	E	F	G	H	I	J	N.W.(KG)
BTCPK0900010	BT40-A2G	318	46	138	280	100	100	193	88	180	BT40	30.9
BTCPK0900020	BT50-A2G	318	46	138	280	100	100	193	88	180	BT40	33.6
BTCPK0900030	SK40-A2G	318	46	138	280	100	100	193	88	180	BT40	30.9
BTCPK0900040	SK50-A2G	318	46	138	280	100	100	193	88	180	BT40	33.6
BTCPK0900050	CAT40-A2G	318	46	138	280	100	100	193	88	180	BT40	30.9
BTCPK0900060	CAT50-A2G	318	46	138	280	100	100	193	88	180	BT40	33.6

CPK Type

抓刀式橫向銑頭 Multi - block Angle Head-BT

- The output interface of BT40 ensures wide- range application with various BT40 tool holder.
- Hardened precision spiral bevel gears ensure stable performance with long service life.
- Cutting direction can be adjusted from 0~360 degree.
- Multi-block support system improves working rigidity and stability.
- The automatic disengagement and engagement of Angle Head can be easily operated on the base of table and improve e ciency.
- Rugged Alloy Steel body construction with compact design.
- BT40 刀具接合介面，提供各種 BT40 刀具之彈性應用，涵蓋大部分加工應用。
- 採用高硬度高精密螺旋傘齒輪，運轉穩定，壽命長。
- 可 360 度旋轉調整加工角度。
- 多點支撐設計，可增加加工剛性及穩定性。
- 可於工作台上自動換刀，增加工作效率。
- 本體設計簡約，合金鋼本體結構堅固。

內孔偏擺度	0.002 mm
材質	合金鋼
轉速	最高 4000 RPM
扭力	最大 60 Nm
齒輪比	1:1
適用主軸	BT, SK(ISO), CAT
標準配件	開口扳手、L 型扳手
出力軸轉向	反轉

Run out	0.002 mm
Material	Alloy Steel
R.P.M.	Max. 4000 RPM
Torque	Max. 60 Nm
Gear Ratio	1:1
Spindle Type	BT, SK(ISO), CAT
Standard Accessory	Open End Wrench, L Type Wrench
Output Rotation	Reverse to Input Rotation

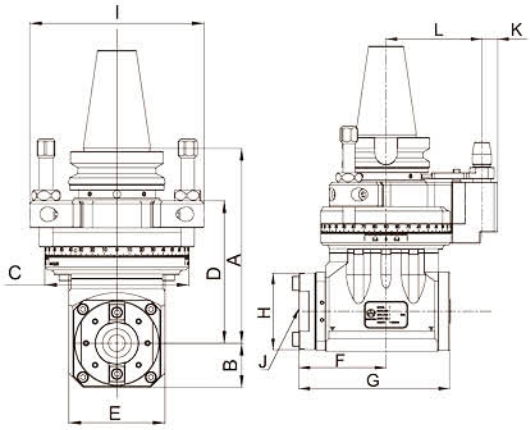

Unit/mm

Code NO. 型號	TYPE 規格	A	B	C	D	E	F	G	H	I	J	K	L	N.W.(KG)
BTCPK0600010	BT50-B1	202.5	46	150	148	100	100	193	88	239	BT40	18	110	22.5
BTCPK0600020	SK50-B1	202.5	46	150	148	100	100	193	88	239	BT40	18	110	22.5
BTCPK0600030	CAT50-B1	202.5	46	150	148	100	100	193	88	239	BT40	18	110	22.5

CPK Type

抓刀式橫向銑頭 Multi - block Angle Head-HSK

- The output interface of HSK63 ensures wide-range application with various HSK63 tool holders.
- Rugged Alloy Steel body construction with compact design.
- Hardened precision spiral bevel gears ensure stable performance with long service life.
- Cutting direction can be adjusted from 0 ~ 360 degree.
- Multi-block support system improves working rigidity and stability.
- The automatic disengagement and engagement of Angle Head can be easily operated on the base of table and improve e ciency.
- HSK63 刀具結合介面，提供各種 HSK63 刀具之彈性應用，涵蓋大部分加工應用。
- 本體設計簡約，合金鋼本體結構堅固。
- 採用高硬度高精密螺旋傘齒輪，運轉穩定，壽命長。
- 可 360 度旋轉調整加工角度。
- 多點支撐設計，可增加加工剛性及穩定性。
- 可於工作台上自動換刀，增加工作效率。

內孔偏擺度	0.002 mm
材質	合金鋼
轉速	最高 4000 RPM
扭力	最大 60 Nm
齒輪比	1:1
適用主軸	BT, SK(ISO), CAT
標準配件	開口扳手、L 型扳手
出力軸轉向	反轉

Run out	0.002 mm
Material	Alloy Steel
R.P.M.	Max. 4000 RPM
Torque	Max. 60 Nm
Gear Ratio	1:1
Spindle Type	BT, SK(ISO), CAT
Standard Accessory	Open End Wrench, L Type Wrench
Output Rotation	Reverse to Input Rotation

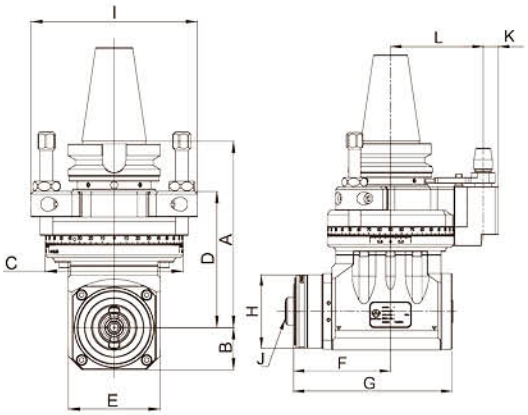

Unit/mm

Code NO. 型號	TYPE 規格	A	B	C	D	E	F	G	H	I	J	K	L	N.W.(KG)
BTCPK1000010	BT50-B2	202.5	46	150	148	100	115	208	87	239	HSK63	18	110	23.4
BTCPK1000020	SK50-B2	202.5	46	150	148	100	115	208	87	239	HSK63	18	110	23.4
BTCPK1000030	CAT50-B2	202.5	46	150	148	100	115	208	87	239	HSK63	18	110	23.4

CPK Type

抓刀式橫向銑頭(中心出水) Multi - block Angle Head-HSK (Int.)

- The output interface of HSK63 ensures wide-range application with various HSK63 tool holders.
- Hardened precision spiral bevel gears ensure stable performance with long service life.
- Cutting direction can be adjusted from 0 ~ 360 degree.
- Multi-block support system ensures working rigidity and stability.
- The automatic disengagement and engagement of Angle Head can be easily operated on the base of table and improve e ciency.
- Rugged Alloy Steel body construction with compact design.
- HSK63 刀具結合介面，提供各種 HSK63 刀具之彈性 應用，涵蓋大部分加工應用。
- 本體設計簡約，合金鋼本體結構堅固。
- 採用高硬度高精密螺旋傘齒輪，運轉穩定，壽命長。
- 可 360 度旋轉調整加工角度。
- 多點支撐設計，可增加加工剛性及穩定性。
- 可於工作台上自動換刀，增加工作效率。

內孔偏擺度	0.002 mm
材質	合金鋼
轉速	最高 4000 RPM
扭力	最大 60 Nm
齒輪比	1:1
適用主軸	BT, SK(ISO), CAT
標準配件	開口扳手、L 型扳手
出力軸轉向	反轉
中心出水	30bar

Run out	0.002 mm
Material	Alloy Steel
R.P.M.	Max. 4000 RPM
Torque	Max. 60 Nm
Gear Ratio	1:1
Spindle Type	BT, SK(ISO), CAT
Standard Accessory	Open End Wrench, L Type Wrench
Output Rotation	Reverse to Input Rotation
Max. Coolant Bar	30bar

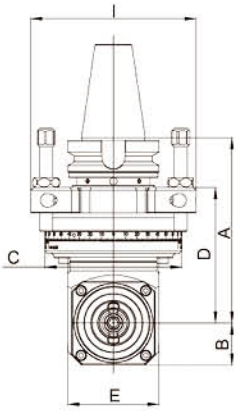

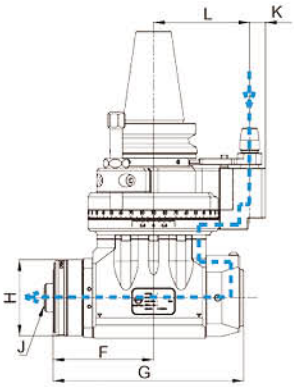

Unit/mm

Code NO. 型號	TYPE 規格	A	B	C	D	E	F	G	H	I	J	K	L	N.W.(KG)
BTCPK1100010	BT50-B2-1	202.5	46	150	148	100	115	218	87	239	HSK63	18	110	23.4
BTCPK1100020	SK50-B2-1	202.5	46	150	148	100	115	218	87	239	HSK63	18	110	23.4
BTCPK1100030	CAT50-B2-1	202.5	46	150	148	100	115	218	87	239	HSK63	18	110	23.4

* Int. : 中心出水 Internal Coolant

CPK Type

法蘭型自動換刀橫向銑頭(立車) Heavy Duty Angle Head (VTC)

- Can be applied on Vertical Turning Center, Plano Milling Machine and various machines with Adapter Plate.
- Built-in spindle positioning system. The exible design of connection part which is suitable for various magazines makes the ATC application possible.
- Can be connected to tooth-shaped Flange Disc or any shape of Machine Spindle surface to reach Max. rigidity.
- Hardened precision spiral bevel gears ensure stable performance with long service life.
- Cutting direction can be adjusted from 0~360 degree.
- 搭配轉接盤，可於立式車床、龍門銑床等各種不同機 台上使用。
- 主軸定位結構，可配合刀庫規格設計，自動換刀入刀 庫。
- 可與齒型連結盤或機台主軸端面形狀連結，達到最佳 化剛性。
- 採用高硬度高精密螺旋傘齒輪，運轉穩定，壽命長。
- 可 360 度旋轉調整加工角度。

內孔偏擺度	0.002 mm
材質	合金鋼
轉速	最高 4000 RPM
扭力	最大 60 Nm
齒輪比	1:1
適用主軸	BT, SK(ISO), CAT
標準配件	開口扳手、L 型扳手
出力軸轉向	反轉

Run out	0.002 mm
Material	Alloy Steel
R.P.M.	Max. 4000 RPM
Torque	Max. 60 Nm
Gear Ratio	1:1
Spindle Type	BT, SK(ISO), CAT
Standard Accessory	Open End Wrench, L Type Wrench
Output Rotation	Reverse to Input Rotation

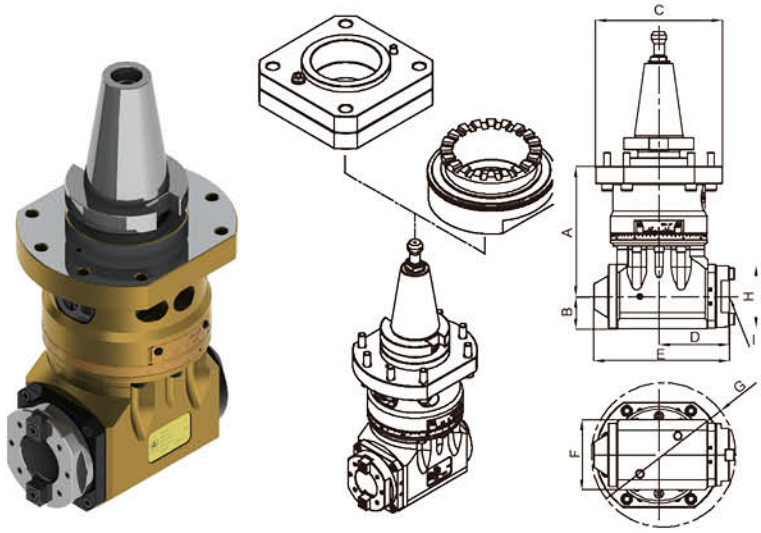

Unit/mm

Code NO. 型號	TYPE 規格	A	B	C	D	E	F	G	H	I	N.W.(KG)
BTCPK1200010	BT50-C1	185	46	180	100	193	100	205	88	BT40	25.7
BTCPK1200020	SK50-C1	185	46	180	100	193	100	205	88	BT40	25.7
BTCPK1200030	CAT50-C1	185	46	180	100	193	100	205	88	BT40	25.7

CPL Type

輕量化橫向銑頭 Light Angle Head

- Compact and lighter body design is suitable for drilling, milling, and tapping application.
- Can be automatic tool changed. Increases productivity.
- Enclosed Positioning Pin: Cutting Direction can be adjusted from 0~360 degrees.
- It allows higher clamping torque and cutting direction could remain during the machining.
- 輕量化設計，適用於鑽銑加工及攻牙加工。
- 自動刀庫換刀加工，量化生產必備工具。
- 環抱型定位塊設計，可 360 度旋轉調整加工角度，並加強鎖固力道及加工角度精確性。

內孔偏擺度	0.002 mm
材質	合金鋼
轉速	最高 4000 RPM
扭力	最大 12 Nm
齒輪比	1:1
適用主軸	BT, SK(ISO), CAT
標準配件	開口扳手、L 型扳手、ER 螺帽
出力軸轉向	反轉

Run out	0.002 mm
Material	Alloy Steel
R.P.M.	Max. 4000 RPM
Torque	Max. 12 Nm
Gear Ratio	1:1
Spindle Type	BT, SK(ISO), CAT
Standard Accessory	Open End Wrench, L Type Wrench, ER Nut
Output Rotation	Reverse to Input Rotation

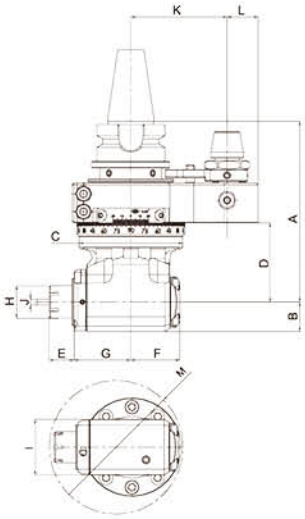

Unit/mm

Code NO. 型號	TYPE 規格	A	B	C	D	E	F	G	H	I	J	K	L	M	N.W.(KG)
BTCPL1300010	BT30-A1.55	122	20	70	53.5	17	33.1	38.3	22	39.5	1~10 (ER16)	55	21	95	3
BTCPL1300020	SK30-A1.55	122	20	70	53.5	17	33.1	38.3	22	39.5	1~10 (ER16)	55	21	95	3
BTCPL1300030	CAT30-A1.55	122	20	70	53.5	17	33.1	38.3	22	39.5	1~10 (ER16)	55	21	95	3
BTCPL1300040	BT30-A1.65	122	20	70	53.5	17	33.1	38.3	22	39.5	1~10 (ER16)	65	21	95	3
BTCPL1300050	BT40-A1.65	122	20	70	53.5	17	33.1	38.3	22	39.5	1~10 (ER16)	65	21	95	3.3
BTCPL1300060	SK30-A1.65	122	20	70	53.5	17	33.1	38.3	22	39.5	1~10 (ER16)	65	21	95	3
BTCPL1300070	SK40-A1.65	122	20	70	53.5	17	33.1	38.3	22	39.5	1~10 (ER16)	65	21	95	3.3
BTCPL1300080	CAT30-A1.65	122	20	70	53.5	17	33.1	38.3	22	39.5	1~10 (ER16)	65	21	95	3
BTCPL1300090	CAT40-A1.65	122	20	70	53.5	17	33.1	38.3	22	39.5	1~10 (ER16)	65	21	95	3.3

* 另有 6000 RPM 可供選擇
* Further option : 6000 RPM

CPL Type

90°橫向銑頭　90°Angle Head

- Compact and lighter body design is suitable for drilling, milling, and tapping application.
- Can be automatic tool changed. Increases productivity.
- Enclosed Positioning Pin: Cutting Direction can be adjusted from 0~360 degrees.
  - It allows higher clamping torque and cutting direction could remain during the machining.
- 輕量化設計，適用於鑽銑加工及攻牙加工。
- 自動刀庫換刀加工，量化生產必備工具。
- 環抱型定位塊設計，可 360 度旋轉調整加工角度，並加強鎖固力道及加工角度精確性。

內孔偏擺度	0.002 mm
材質	航太用鋁合金 / 球狀石墨鑄鐵 / 合金鋼
轉速	最高 6000 RPM
扭力	最大 30 Nm
齒輪比	1:1
適用主軸	BT, SK(ISO), CAT
標準配件	開口扳手、ER 扳手、ER 螺帽
出力軸轉向	反轉

Run out	0.002 mm
Material	Aerospace Alu. Alloy / Ductile Cast Iron / Alloy Steel
R.P.M.	Max. 6000 RPM
Torque	Max. 30 Nm
Gear Ratio	1:1
Spindle Type	BT, SK(ISO), CAT
Standard Accessory	Open End Wrench, L Type Wrench
Output Rotation	Reverse to Input Rotation

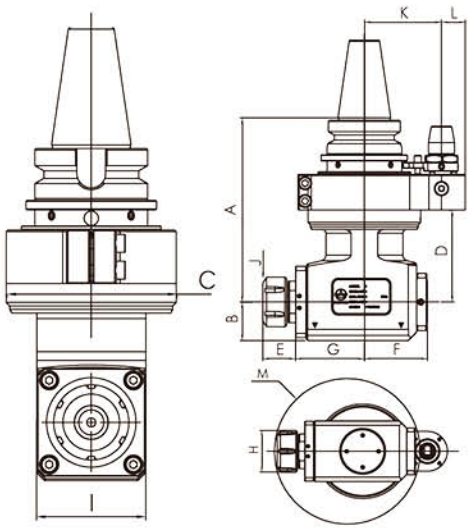

Unit/mm

Code NO. 型號	TYPE 規格	A	B	C	D	E	F	G	H	I	J	K	L	M	N.W.(KG)
BTCPL1400010	BT40-A2.65	155	32.5	95	68.5	32	52.7	58	43	61	1~16 (ER25)	65	20	146	6.7
BTCPL1400020	SK40-A2.65	160.5	32.5	95	68.5	32	52.7	58	43	61	1~16 (ER25)	65	20	146	6.7
BTCPL1400030	CAT40-A2.65	160.5	32.5	95	68.5	32	52.7	58	43	61	1~16 (ER25)	65	20	146	6.7
BTCPL1400040	BT50-A2.80/110	162	32.5	95	68.5	32	52.7	58	43	61	1~16 (ER25)	80/110	20	146	9.1
BTCPL1400050	SK50-A2.80/110	162	32.5	95	68.5	32	52.7	58	43	61	1~16 (ER25)	80/110	20	146	9.1
BTCPL1400060	CAT50-A2.80/110	162	32.5	95	68.5	32	52.7	58	43	61	1~16 (ER25)	80/110	20	146	9.1
BTCPL1400070	BT40-A3.65	155	32.5	95	68.5	34	52.7	58	50	61	3~20 (ER32)	65	20	152	6.7
BTCPL1400080	SK40-A3.65	160.5	32.5	95	68.5	34	52.7	58	50	61	3~20 (ER32)	65	20	152	6.7
BTCPL1400090	CAT40-A3.65	160.5	32.5	95	68.5	34	52.7	58	50	61	3~20 (ER32)	65	20	152	6.7
BTCPL1400100	BT50-A3.80/110	162	32.5	95	68.5	34	52.7	58	50	61	3~20 (ER32)	80/110	20	152	9.1
BTCPL1400110	SK50-A3.80/110	162	32.5	95	68.5	34	52.7	58	50	61	3~20 (ER32)	80/110	20	152	9.1
BTCPL1400120	CAT50-A3.80/110	162	32.5	95	68.5	34	52.7	58	50	61	3~20 (ER32)	80/110	20	152	9.1

CPL Type

輕量化萬向銑頭 Light Angle Head-Universal

- Cutting angle can be set from 0° ~ ±120° for various applications.
- Compact design provides extra strength, oil-proof, dust-proof, and duration.
- Can be automatic tool changed. Increases productivity.
- Enclosed Positioning Pin: Cutting Direction can be adjusted from 0~360 degrees. It allows higher clamping torque and cutting direction could remain during the machining.
- 0° ~±120° 加工角度多樣化，適用於各種加工應用。
- 小型化設計、剛性高、防油、防塵佳、使用壽命長。
- 自動刀庫換刀加工，量化生產必備工具。
- 環抱型定位塊設計，可 360 度旋轉調整加工角度，並加強鎖固力道及加工角度精確性。

內孔偏擺度	0.002 mm
材質	合金鋼
轉速	最高 4000 RPM
扭力	最大 9 Nm
齒輪比	1:1
適用主軸	BT, SK(ISO), CAT
標準配件	開口扳手、ER 扳手、ER 螺帽
出力軸轉向	正轉

Run out	0.002 mm
Material	Alloy Steel
R.P.M.	Max. 4000 RPM
Torque	Max. 9 Nm
Gear Ratio	1:1
Spindle Type	BT, SK(ISO), CAT
Standard Accessory	Open End Wrench, ER Wrench, ER Nut
Output Rotation	Same as Input Rotation

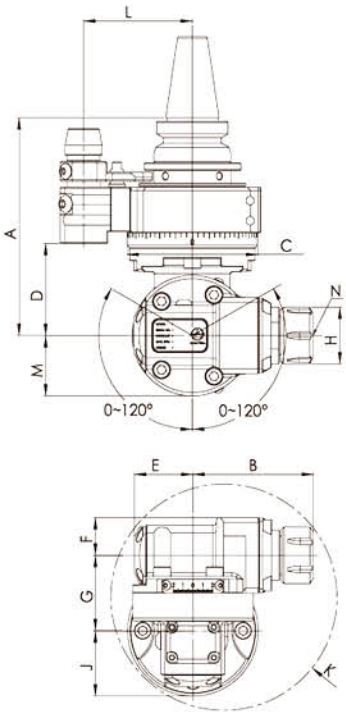

Unit/mm

Code NO. 型號	TYPE 規格	A	B max	C	D	E	F	G	H	J	K	L	M	N	N.W.(KG)
BTCPL1500010	BT30-B1.55	130	72~79	73	61.5	34.5	22.5	45	36	36.5	140	55	36	1~13 (ER20)	4
BTCPL1500020	SK30-B1.55	130	72~79	73	61.5	34.5	22.5	45	36	36.5	140	55	36	1~13 (ER20)	4
BTCPL1500040	BT30-B1.65	130	72~79	73	61.5	34.5	22.5	45	36	36.5	140	65	36	1~13 (ER20)	4
BTCPL1500050	BT40-B1.65	130	72~79	73	61.5	34.5	22.5	45	36	36.5	140	65	36	1~13 (ER20)	4.5
BTCPL1500060	SK30-B1.65	130	72~79	73	61.5	34.5	22.5	45	36	36.5	140	65	36	1~13 (ER20)	4
BTCPL1500070	SK40-B1.65	130	72~79	73	61.5	34.5	22.5	45	36	36.5	140	65	36	1~13 (ER20)	4.5
BTCPL1500090	CAT40-B1.65	130	72~79	73	61.5	34.5	22.5	45	36	36.5	140	65	36	1~13 (ER20)	4.5

CPL Type

細長型橫向銑頭 Modular Angle Head-Ultra Slim

- Compact and longer body design is suitable for machining the deep-hole and deep-slot.
- Can be automatic tool changed. Increases productivity.
- Cutting Direction can be adjusted from 0~360 degrees.
- 小型化設計、加長型下座，適用於深槽與深孔之內面加工。
- 自動刀庫換刀加工，量化生產必備工具。
- 可 360 度旋轉調整加工角度。

材質	合金鋼
轉速	最高 4000 RPM
扭力	C1: 最大 6 Nm D1: 最大 12 Nm
鑽孔	最大 6 mm
攻牙	C1: 最大 M4 D1: 最大 M6
齒輪比	1:1
適用主軸	BT, SK(ISO), CAT
標準配件	T 型扳手

Material	Alloy Steel
R.P.M.	Max. 4000 RPM
Torque	C1: Max. 6 Nm D1: Max. 12 Nm
Drilling	Max. 6 mm
Tapping	C1: Max. M4 D1: Max. M6
Gear Ratio	1:1
Spindle Type	BT, SK(ISO), CAT
Standard Accessory	Open End Wrench, ER Wrench, ER Nut

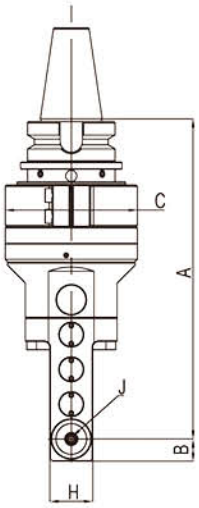

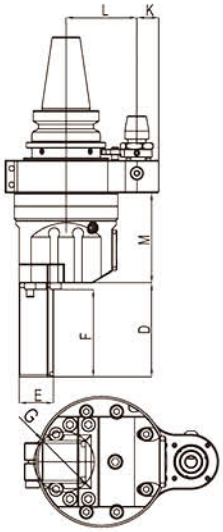

Unit/mm

Code NO. 型號	TYPE 規格	A	B	C	D	E	F	G	H	J	K	L	M	N.W.(KG)
BTCPL1700010	BT40-C4.65	230	16	95	86	31.5	80	44	31	2~6 (ADC6)	20	65	82.5	6.6
BTCPL1700020	BT50-C4.80	237	16	95	86	31.5	80	44	31	2~6 (ADC6)	20	80	82.5	9
BTCPL1700030	BT50-C4.110	237	16	95	86	31.5	80	44	31	2~6 (ADC6)	20	110	82.5	9
BTCPL1700040	SK40-C4.65	230	16	95	86	31.5	80	44	31	2~6 (ADC6)	20	65	82.5	6.6
BTCPL1700050	SK50-C4.80	237	16	95	86	31.5	80	44	31	2~6 (ADC6)	20	80	82.5	9
BTCPL1700060	SK50-C4.110	237	16	95	86	31.5	80	44	31	2~6 (ADC6)	20	110	82.5	9
BTCPL1700070	CAT40-C4.65	230	16	95	86	31.5	80	44	31	2~6 (ADC6)	20	65	82.5	6.6
BTCPL1700080	CAT50-C4.80	237	16	95	86	31.5	80	44	31	2~6 (ADC6)	20	80	82.5	9
BTCPL1700090	CAT50-C4.110	237	16	95	86	31.5	80	44	31	2~6 (ADC6)	20	110	82.5	9

* 此橫銑頭須採用我司特製 ADC 筒夾
* This Angle Head requires the adoption of special ADC collet.

CPM Type

鋁合金橫向銑頭 Aluminum Angle Head

- 6000 rpm high speed processing. Increases machining e ciency.
- Compact and lighter body design is suitable for machines with light-load magazine and high speed ATC system.
- Can be automatic tool changed. Increases productivity.
- Cutting Direction can be adjusted from 0~360 degrees.
- 6000 PRM 高轉速加工，提高加工效率。
- 輕量化設計，適用於輕型及高速自動換刀之機台。
- 自動刀庫換刀加工，量化生產必備工具。
- 可 360° 旋轉調整加工角度。

內孔偏擺度	0.002 mm
材質	航太用鋁合金
轉速	最高 6000 RPM
扭力	最大 15 Nm
齒輪比	1:1
適用主軸	BT, SK(ISO), CAT
標準配件	開口扳手、ER 扳手、ER 螺帽
出力軸轉向	反轉

Run out	0.002 mm
Material	Aerospace Aluminum Alloy
R.P.M.	Max. 6000 RPM
Torque	Max. 15 Nm
Gear Ratio	1:1
Spindle Type	BT, SK(ISO), CAT
Standard Accessory	Open End Wrench, ER Wrench, ER Nut
Output Rotation	Reverse to Input Rotation

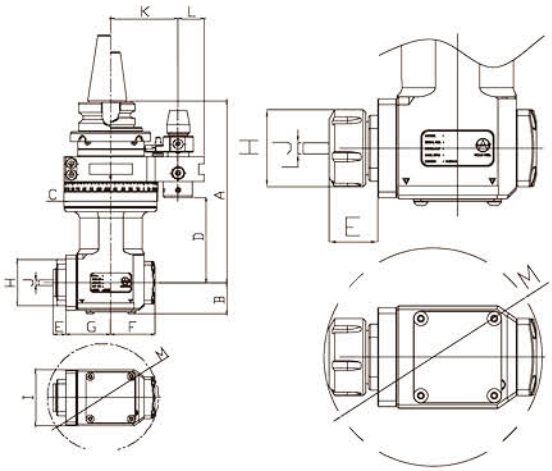

Unit/mm

Code NO. 型號	TYPE 規格	A	B	C	D	E	F	G	H	I	J	K	L	M	N.W.(KG)
BTCPM1900010	BT30-A04.180G	180	31.2	90	84.5	26.5	43	43.5	42	60	1~16 (ER25)	65	25	120	4.5
BTCPM1900020	BT40-A04.180G	180	31.2	90	84.5	26.5	43	43.5	42	60	1~16 (ER25)	65	25	120	5
BTCPM1900030	SK30-A04.180G	180	31.2	90	84.5	26.5	43	43.5	42	60	1~16 (ER25)	65	25	120	4.5
BTCPM1900040	SK40-A04.180G	180	31.2	90	84.5	26.5	43	43.5	42	60	1~16 (ER25)	65	25	120	5
BTCPM1900060	CAT40-A04.180G	180	31.2	90	84.5	26.5	43	43.5	42	60	1~16 (ER25)	65	25	120	5
BTCPM1900070	BT30-A10.180G	180	31.2	90	84.5	12	43	43.5	45	60	1~13 (ER20 I.N)	65	25	105	4.5
BTCPM1900080	BT40-A10.180G	180	31.2	90	84.5	12	43	43.5	45	60	1~13 (ER20 I.N)	65	25	105	5
BTCPM1900090	SK30-A10.180G	180	31.2	90	84.5	12	43	43.5	45	60	1~13 (ER20 I.N)	65	25	105	4.5
BTCPM1900100	SK40-A10.180G	180	31.2	90	84.5	12	43	43.5	45	60	1~13 (ER20 I.N)	65	25	105	5
BTCPM1900120	CAT40-A10.180G	180	31.2	90	84.5	12	43	43.5	45	60	1~13 (ER20 I.N)	65	25	105	5

* I.N. : 內牙 Internal Nut

CPM Type

鋁合金橫向銑頭(中心出水) Aluminum Angle Head (Int.)

- 6000 rpm high speed processing. Increases machining e ciency.
- Compact and lighter body design is suitable for machines with light-load magazine and high speed ATC system.
- Can be automatic tool changed. Increases productivity.
- Cutting Direction can be adjusted from 0~360 degrees.
- 6000 PRM 高轉速加工，提高加工效率。
- 輕量化設計，適用於輕型及高速自動換刀之機台。
- 自動刀庫換刀加工，量化生產必備工具。
- 可 360° 旋轉調整加工角度。

內孔偏擺度	0.002 mm
材質	航太用鋁合金
轉速	最高 6000 RPM
扭力	最大 15 Nm
齒輪比	1:1
適用主軸	BT, SK(ISO), CAT
標準配件	開口扳手、ER 扳手、ER 螺帽
出力軸轉向	反轉
中心出水	30bar

Run out	0.002 mm
Material	Aerospace Aluminum Alloy
R.P.M.	Max. 6000 RPM
Torque	Max. 15 Nm
Gear Ratio	1:1
Spindle Type	BT, SK(ISO), CAT
Standard Accessory	Open End Wrench, ER Wrench, ER Nut
Output Rotation	Reverse to Input Rotation
Max. Coolant Bar	30bar

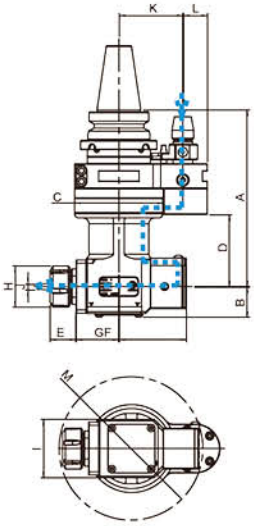

Unit/mm

Code NO. 型號	TYPE 規格	A	B	C	D	E	F	G	H	I	J	K	L	M	N.W.(KG)
BTCP M2000010	BT30-A04.180G-1	180	31.2	90	84.5	26.5	68.7	43.5	42	60	1~16 (ER25)	65	25	120	5.3
BTCP M2000020	BT40-A04.180G-1	180	31.2	90	84.5	26.5	68.7	43.5	42	60	1~16 (ER25)	65	25	120	5.8
BTCP M2000030	SK30-A04.180G-1	180	31.2	90	84.5	26.5	68.7	43.5	42	60	1~16 (ER25)	65	25	120	5.3
BTCP M2000040	SK40-A04.180G-1	180	31.2	90	84.5	26.5	68.7	43.5	42	60	1~16 (ER25)	65	25	120	5.8
BTCP M2000060	CAT40-A04.180G-1	180	31.2	90	84.5	26.5	68.7	43.5	42	60	1~16 (ER25)	65	25	120	5.8

* Int. : 中心出水 Internal Coolant

CPM Type

鋁合金後縮橫向銑頭　Aluminum Offset Angle Head

- The output interface of BT40 ensures wide- range application with various BT40 Tool Holder.
- O set design ensures compact body and largely eliminates interference.
- O set design eliminates the protrusion of tools and enhances working rigidity.
- Special tool-locking design ensures easier tool engagement and release.
- Can be automatic tool changed. Increases productivity.
- Cutting Direction can be adjusted from 0~360 degrees.
- BT 40 刀具接合介面，提供各種 BT40 刀具之彈性應用，涵蓋大部分加工應用。
- 採用後縮設計，減少本體長度，降低工件干涉。
- 刀具加工支點靠近橫銑頭中心增加加工剛性。
- 拆刀、鎖刀板手設計，方便拆鎖刀時固定橫向軸與施力。
- 自動刀庫換刀加工，量化生產必備工具。
- 可 360 度旋轉調整加工角度。

內孔偏擺度	0.002 mm
材質	航太用鋁合金 / 合金鋼
轉速	最高 4000 RPM
扭力	最大 50 Nm
齒輪比	1:1
適用主軸	BT, SK(ISO), CAT
標準配件	鎖刀板、L 型扳手
出力軸轉向	正轉

Run out	0.002 mm
Material	Aerospace Aluminum Alloy/ Alloy Steel
R.P.M.	Max. 4000 RPM
Torque	Max. 50 Nm
Gear Ratio	1:1
Spindle Type	BT, SK(ISO), CAT
Standard Accessory	Tool-Locking Plate, L type Wrench
Output Rotation	Same as Input Rotation

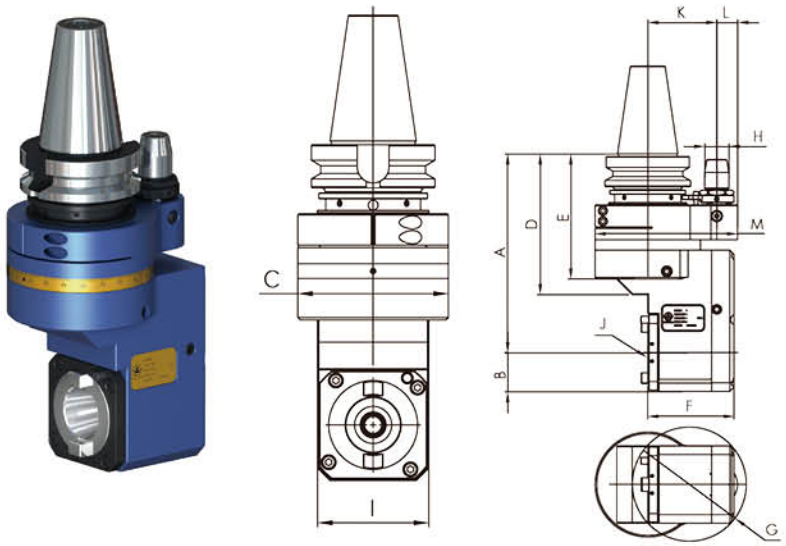

Unit/mm

Code NO. 型號	TYPE 規格	A	B	C	D	E	F	G	H	I	J	K	L	M	N.W.(KG)
BTCPM2100010	BT50-D42.230	230	45	122	163	145	100	132	28	90	BT40	80/85/110	24	165	14.8
BTCPM2100020	SK50-D42.230	230	45	122	163	145	100	132	28	90	BT40	80/85/110	24	165	14.8
BTCPM2100030	CAT50-D42.230	230	45	122	163	145	100	132	28	90	BT40	80/85/110	24	165	14.8

選購配件 Optional Accessory

定位塊 Setting Block / Stopper

- Standard - Taper 40
- Code No. - BTCPT4220010
- Type - Taper40 1CP-00288

- 標準錐度 – 40

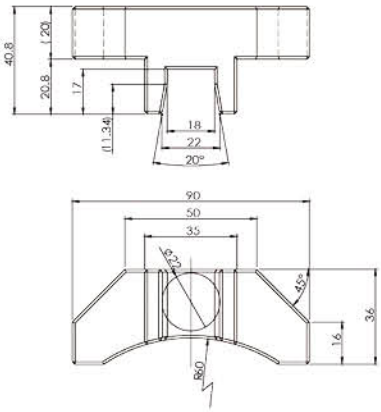

- Standard - Taper 50
- Code No. - BTCPT5220010
- Type - Taper50 1CP-00289

- 標準錐度 – 50

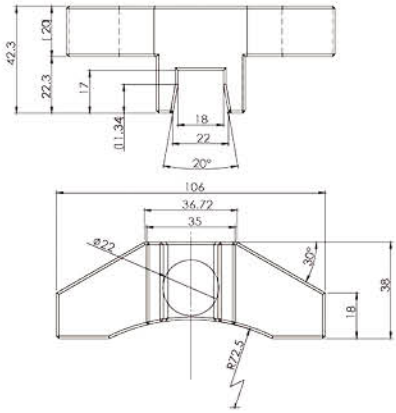

客製化定位塊 Customized Setting Block / Stopper

- Code No. - BTCPT5230010
- Type - BT-1

* 圖面僅供參考。實際的定位塊規格視客戶機台主軸尺寸不同而定。
* For reference only. The real speci cation would vary from di erent machine spindle dimensions.

選購配件 Optional Accessory

客製法蘭盤 Customized Flange

- CPK-A1 Series Only
- Code No. - BTCPK08P0010
- Type - BT-2

- CPK-A1 專用

延長器 Extension

- CPD Series Only

- CPD 系列專用

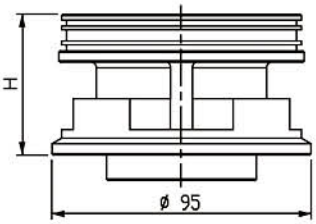

Unit/mm

Code NO. 型號	TYPE 規格	H
BTCPDE1P0010	E1	50
BTCPDE1P0020	E2	100

筒夾 Collet

- CPK-A1 Series Only
- Code No. - BTCPLADP0010
- Type - BT-2

- CPK-A1 專用

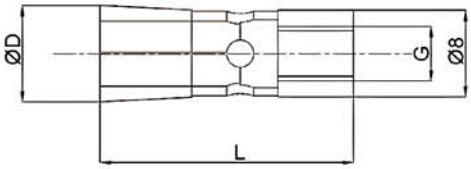

Unit/mm

Code NO. 型號	TYPE 規格	Metric Sze	D	L	G	N.W.(KG)
BTCPLADP0010	ADC6	2/3/4/5/6	8.9	23.5	M5*P0.8	0.005

Chum Power

EndMill & Face Milling Cutter System

端銑刀及面銑刀系統

J

A001 CJU Drilling & Milling Endmill

CJU型鑽銑共用端銑刀

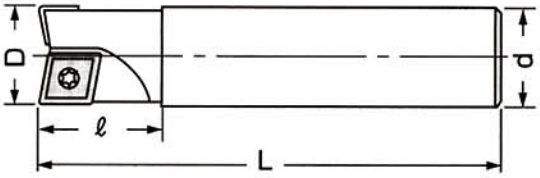

Code NO. 型號	TYPE 規格	D	L	d	ℓ	Teeth 刃數	Insert 刀片規格	Screw 螺絲	Wrench 扳手
BTSPA0002000	CJU -1010×130	10	130	10	30	1	CCMT060204	SCR - CJU2.5	T8
BTSPA0006000	CJU -1212×130	12	130	12	30	1	CPMT080204Z		
BTSPA0008000	CJU - 1616×120	16	120	16	30	2	CCMT060204 CPMT080204Z		
BTSPA0010000	CJU - 1616×150	16	150	16	40	2			
BTSPA0012000	CJU - 1616×175	16	175	16	40	2			
BTSPA0014000	CJU - 1616×200	16	200	16	40	2			
BTSPA0018000	CJU - 1716×175	17	175	16	40	2			
BTSPA0020000	CJU - 1716×200	17	200	16	40	2			
BTSPA0022000	CJU - 2020×130	20	130	20	30	2	CCMT060204 CPMT090204Z	SCR - CJU2.5 SCR - CJU3.5	T8.T15
BTSPA0024000	CJU - 2020×150	20	150	20	40	2			
BTSPA0026000	CJU - 2020×185	20	185	20	50	2			
BTSPA0030000	CJU - 2120×150	21	150	20	40	2			
BTSPA0032000	CJU - 2120×200	21	200	20	40	2			
BTSPA0034000	CJU - 2525×130	25	130	25	40	2	CPMT090308 CPMT120308Z	SCR - CJU4	T15
BTSPA0036000	CJU - 2525×150	25	150	25	50	2			
BTSPA0038000	CJU - 2525×220	25	220	25	70	2			
BTSPA0042000	CJU - 2625×200	26	200	25	50	2			
BTSPA0044000	CJU - 2625×250	26	250	25	50	2			
BTSPA0046000	CJU -3232×170	32	170	32	50	2	CPMT120408 CPMT160408Z	SCR - CJU5	T20
BTSPA0048000	CJU - 3232×250	32	250	32	80	2			
BTSPA0050000	CJU - 3232×300	32	300	32	80	2			
BTSPA0052000	CJU - 3332×350	32	350	32	80	2			

* Hitachi inserts recommended
* 建議使用 Hitach 銑刀片

A003 EHU High-Speed Endmill

EHU型超快削型端銑刀

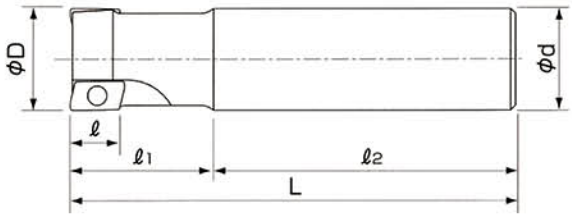

Code NO. 型號	TYPE 規格	ØD	Ød	ℓ	ℓ1	ℓ2	L	Teeth 刃數	Insert 刀片規格	Screw 螺絲	Wrench 扳手
BTSPA0142000	EHU10 - 1616 × 120	16	16	10	30	90	120	2	JDMT1003	SCR - EHU2.5	T7
BTSPA0144000	EHU10 - 1616 × 150	16	16	10	50	100	150	2			
BTSPA0146000	EHU10 - 2020 × 130	20	20	10	30	100	130	3			
BTSPA0148000	EHU10 - 2020 ×150	20	20	10	50	100	150	3			
BTSPA0150000	EHU10 - 2525 × 150	25	25	10	40	110	150	4			
BTSPA0152000	EHU10 - 2525 × 200	25	25	10	60	140	200	4			
BTSPA0162000	EHU15 - 2525 × 150	25	25	15	40	110	150	2	JDMT1505	SCR - EHU4	T15
BTSPA0164000	EHU15 - 2525 × 200	25	25	15	60	140	200	2			
BTSPA0166000	EHU15 - 3025 ×150	30	25	15	40	110	150	2			
BTSPA0168000	EHU15 - 3025 × 200	30	25	15	40	160	200	2			
BTSPA0170000	EHU15 - 3232 × 150	32	32	15	40	110	150	3			
BTSPA0172000	EHU15 - 3232 × 200	32	32	15	60	140	200	3			
BTSPA0174000	EHU15 - 3532 × 150	35	32	15	40	110	150	3			
BTSPA0176000	EHU15 - 3532 × 200	35	32	15	60	140	200	3			

* Hitachi inserts recommended
* 建議使用 Hitach 銑刀片

A004 EHJ Drilling & Milling Endmill

EHJ型多功能快削型銑刀

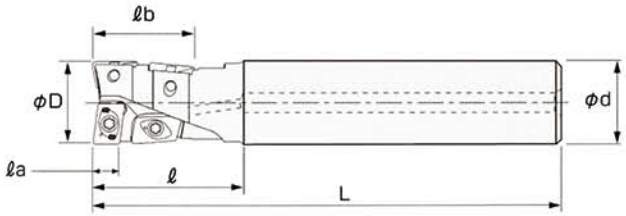

Code NO. 型號	TYPE 規格	ØD	L	ℓa	ℓb	ℓ	Ød	Insert 刀片規格	Pcs 數量	Insert 刀片規格	Pcs 數量	Wrench 扳手
BTSPA0202000	EHJ2 - 1616.× 120	16	120	4.5	8.5	33	16	JDMT 080308L	1	JDMT 090308R	1	T6
BTSPA0204000	EHJ2 - 1616 ×175	16	175	4.5	8.5	50	16					
BTSPA0206000	EHJ2 - 1716 ×120	17	120	4.5	8.5	33	16					
BTSPA0208000	EHJ2 - 1716 ×175	17	175	4.5	8.5	33	16					
BTSPA0210000	EHJ2 - 2020 × 130	20	130	5.5	9.5	35	20	JDMT 100308L	1	JDMT 100308R	1	T7
BTSPA0212000	EHJ2 - 2020 × 185	20	185	5.5	9.5	60	20					
BTSPA0214000	EHJ2 - 2120 ×130	21	130	5.5	9.5	35	20					
BTSPA0216000	EHJ2 - 2120 ×185	21	185	5.5	9.5	35	20					
BTSPA0218000	EHJ2 - 2525× 140	25	140	7	12.5	45	25	JDMT 12T308L	1	JDMT 12T308R	1	T10
BTSPA0220000	EHJ2 - 2525 × 220	25	220	7	12.5	75	25					
BTSPA0222000	EHJ2 - 2625 × 140	26	140	7	12.5	45	25					
BTSPA0224000	EHJ2 - 2625 × 220	26	220	7	12.5	45	25					
BTSPA0226000	EHJ2 - 3232 × 150	32	150	8.5	14.5	50	32	JDMT 160508L	1	JDMT 150508R	1	T15
BTSPA0228000	EHJ2 - 3232 × 230	32	230	8.5	14.5	90	32					
BTSPA0230000	EHJ2 - 3332 × 150	33	150	8.5	14.5	50	32					
BTSPA0232000	EHJ2 - 3332 × 230	33	230	8.5	14.5	50	32					

* Hitachi inserts recommended
* 建議使用 Hitach 銑刀片

A005 ESRF High-Feed Milling Cutter

ESRF型高效率切削平面銑刀

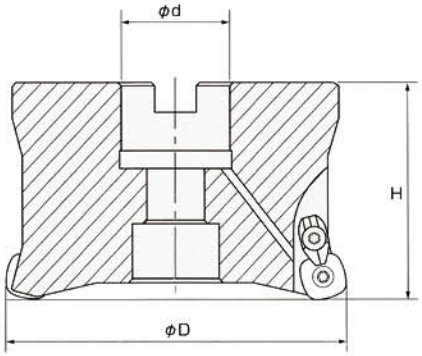

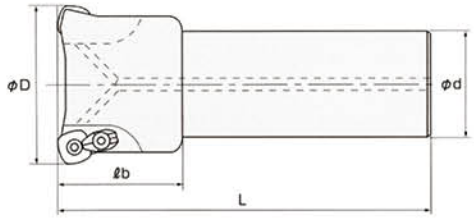

Code NO. 型號	TYPE 規格	ØD	L	Ød	ℓb	Teeth 刃數	Insert 刀片規格	Wrench 扳手
BTSPA0292000	ESRF - 3232 × 150	32	150	32	70	2	SDNW1205ZDTN - R15 SDNT1205ZDTN - R15	T15
BTSPA0294000	ESRF - 3232 × 200	32	200	32	70	2		
BTSPA0296000	ESRF - 3232 × 250	32	250	32	70	2		
BTSPA0298000	ESRF - 4032 × 200	40	200	32	70	3		
BTSPA0300000	ESRF - 4032 × 250	40	250	32	70	3		
BTSPA0302000	ESRF - 4032 × 300	40	300	32	70	3		

* Hitachi inserts recommended
* 建議使用 Hitach 銑刀片

A006 CEX High-Speed Endmill

CEX型快削型端銑刀

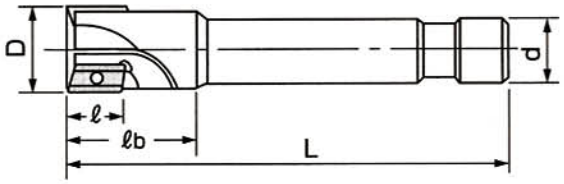

Code NO. 型號	TYPE 規格	D	L	d	ℓ	ℓb	Ød	Insert 刀片規格	Screw 螺絲	Wrench 扳手
BTSPA0322000	CEX - 1212 × 120	12	120	12	12	25	1	APET1202	SCR - CEX3.5	T15
BTSPA0324000	CEX - 1212 × 150	12	150	12	12	25	1			
BTSPA0326000	CEX - 1616 × 120	16	120	16	12	30	1			
BTSPA0328000	CEX - 1616 ×150	16	150	16	12	30	1			
BTSPA0332000	CEX - 2020 × 120	20	120	20	12	30	2			
BTSPA0334000	CEX - 2020 × 150	20	150	20	12	30	2			
BTSPA0336000	CEX - 2020 × 200	20	200	20	12	30	2			
BTSPA0338000	CEX - 2525 × 130	25	130	25	15	35	2	ADET1603	SCR - CEX4	
BTSPA0340000	CEX - 2525 ×160	25	160	25	15	35	2			
BTSPA0342000	CEX - 2525 × 200	25	200	25	15	35	2			
BTSPA0344000	CEX - 2525 × 250	25	250	25	15	35	2			
BTSPA0346000	CEX - 3025 × 150	30	150	25	15	45	2			
BTSPA0350000	CEX - 3232 × 150	32	150	32	15	45	3			
BTSPA0354000	CEX - 3232 × 200	32	200	32	15	45	3			

* Hitachi inserts recommended * 建議使用 Hitach 銑刀片

A007 CAP300R High-Speed Rough Endmill

CAP300R型快削型端銑刀

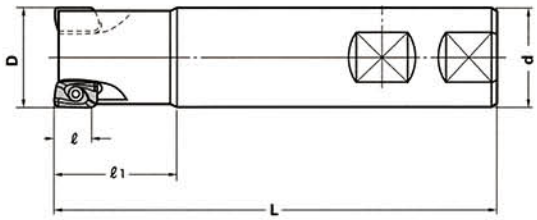

Code NO. 型號	TYPE 規格	D	d	ℓ1	ℓ	L	Teeth 刃數	Insert 刀片規格	Screw 螺絲	Wrench 扳手
BTSPA0382000	CAP300R - 1010 ×100	10	10	25	9	100	1	APMT 1135PDER	SCR - CAP2.5	T8
BTSPA0384000	CAP300R - 1016 ×100	10	16	25	9	100	1			
BTSPA0386000	CAP300R - 1212 ×100	12	12	25	9	100	1			
BTSPA0388000	CAP300R - 1216 ×100	12	16	25	9	100	1			
BTSPA0390000	CAP300R - 1616 ×120	16	16	25	9	120	2			
BTSPA0392000	CAP300R - 1616 ×160	16	16	25	9	160	2			
BTSPA0394000	CAP300R - 2020 ×120	20	20	30	9	120	2			
BTSPA0396000	CAP300R - 2020 ×150	20	20	30	9	150	2			
BTSPA0398000	CAP300R - 2020 ×200	20	20	30	9	200	2			
BTSPA0400000	CAP300R - 2525 ×150	25	25	35	9	150	4			
BTSPA0402000	CAP300R - 2525 ×200	25	25	35	9	200	4			

* Mitsubishi inserts recommended * 建議使用 Mitsubishi 銑刀片

A008 CAP400R High-Speed Rough Endmill

CAP400R型快削型端銑刀

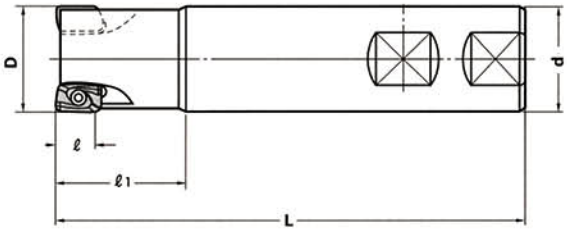

Code NO. 型號	TYPE 規格	D	d	ℓ1	ℓ	L	Teeth 刃數	Insert 刀片規格	Screw 螺絲	Wrench 扳手
BTSPA0422000	CAP400R - 2525 ×150	25	25	35	14	150	2	APMT 1604PDER	SCR - CAP4	T15
BTSPA0424000	CAP400R - 2525 × 200	25	25	35	14	200	2			
BTSPA0426000	CAP400R - 3025 × 150	30	25	45	14	150	2			
BTSPA0428000	CAP400R - 3025 × 200	30	25	45	14	200	2			
BTSPA0430000	CAP400R - 3232 × 150	32	32	45	14	150	3			
BTSPA0432000	CAP400R - 3232 × 200	32	32	60	14	200	3			
BTSPA0434000	CAP400R - 3232 × 250	32	32	60	14	250	3			
BTSPA0436000	CAP400R - 3232 × 300	32	32	60	14	300	3			
BTSPA0440000	CAP400R - 3532 × 150	35	32	45	14	150	3			
BTSPA0442000	CAP400R - 3532 × 200	35	32	45	14	200	3			
BTSPA0444000	CAP400R - 3532 × 250	35	32	45	14	250	3			
BTSPA0446000	CAP400R - 3532 × 300	35	32	45	14	300	3			
BTSPA0452000	CAP400R - 4032 ×150	40	32	45	14	150	3			
BTSPA0454000	CAP400R - 4032 × 200	40	32	45	14	200	3			
BTSPA0456000	CAP400R - 5032 ×150	50	32	45	14	150	4			
BTSPA0458000	CAP400R - 5042 × 150	50	42	45	14	150	4			

* Mitsubishi inserts recommended
* 建議使用 Mitsubishi 銑刀片

A009 CAP400R Face Milling Cutter
CAP400R型平面銑刀

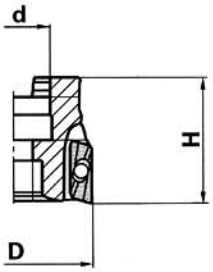

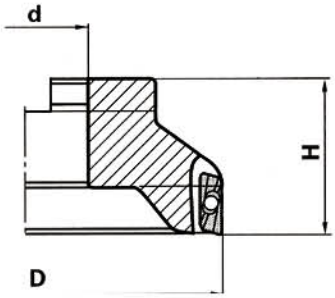

Code NO. 型號	TYPE 規格	D	d	H	Teeth 刃數	Insert 刀片規格	Screw 螺絲	Wrench 扳手
BTSPA0473000	CAP400R - FM50	50	22	40	4	APMT 1604	SCR - CAP4	T15
BTSPA0474000	CAP400R - FM63	63	25.4	40	5			
BTSPA0475000	CAP400R - FM63		22					
BTSPA0476000	CAP400R - FM80	80	25.4	50	6			
BTSPA0477000	CAP400R - FM80		27					
BTSPA0478000	CAP400R - FM100	100	31.75	50	7			
BTSPA0479000	CAP400R - FM100		32					
BTSPA0480000	CAP400R - FM125	125	38.1	50	8			
BTSPA0481000	CAP400R - FM125		40					
BTSPA0482000	CAP400R - FM160	160	38.1	50	10			
BTSPA0483000	CAP400R - FM160		40					

** Mitsubishi inserts recommended * 建議使用 Mitsubishi 銑刀片

A010 SFM Shoulder Face Milling Cutter
SFM型直角平面銑刀

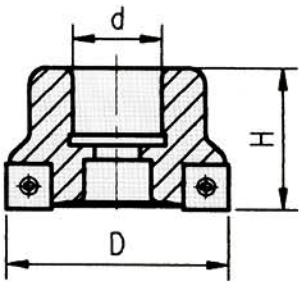

Code NO. 型號	TYPE 規格	D	d	H	Teeth 刃數	Insert 刀片規格	Screw 螺絲	Wrench 扳手
BTSPA0504000	SFM - 63	63	25.4	40	5	SPLT1204	SCR - SFM5	T20
BTSPA0506000	SFM - 80	80	25.4	45	6			
BTSPA0508000	SFM -100	100	31.75	50	7			

* ISO code * 符合 ISO 規範

A013 CRS Radius Endmill

CRS型R角端銑刀

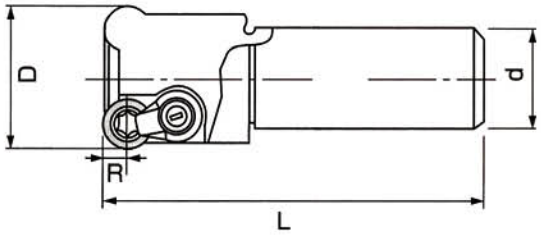

Code NO. 型號	TYPE 規格	D	L	d	R	Teeth 刃數	Insert 刀片規格	Clamp 壓板	Screw 螺絲	Wrench 扳手
BTSPA0592000	CRS - 4R12 × 120	12	120	12	4	1	RDMT0802	SCR - M3U	SCR - CRS3	T10
BTSPA0594000	CRS - 4R12 × 150	12	150	12	4	1		CL - 4R		T10/15
BTSPA0596000	CRS - 4R16 × 120	16	120	16	4	1/2				
BTSPA0598000	CRS - 4R16 × 150	16	150	16	4	2				
BTSPA0600000	CRS - 4R20 × 150	20	150	20	4	2				
BTSPA0602000	CRS - 4R20 × 200	20	200	20	4	2				
BTSPA0604000	CRS - 5R25 × 150	25	150	25	5	2	RDMT10T3	CL - 5R	SCR- CRS3.5	T15
BTSPA0606000	CRS - 5R25 × 200	25	200	25	5	2				
BTSPA0608000	CRS - 5R25 × 250	25	250	25	5	2				
BTSPA0610000	CRS - 5R25 × 300	25	300	25	5	2				
BTSPA0612000	CRS - 5R30 × 150	30	150	25	5	2				
BTSPA0614000	CRS - 5R30 × 200	30	200	25	5	2				
BTSPA0616000	CRS - 5R30 × 250	30	250	25	5	2				
BTSPA0618000	CRS - 5R30 × 300	30	300	25	5	2				
BTSPA0620000	CRS - 5R32 × 150	32	150	32	5	3				
BTSPA0622000	CRS - 5R32 × 200	32	200	32	5	3				
BTSPA0624000	CRS - 5R32 × 250	32	250	32	5	3				
BTSPA0626000	CRS - 5R32 × 300	32	300	32	5	3				
BTSPA0628000	CRS - 5R35 ×150	35	150	32	5	3				
BTSPA0630000	CRS - 5R35 × 200	35	200	32	5	3				
BTSPA0632000	CRS - 5R35 × 250	35	250	32	5	3				
BTSPA0634000	CRS - 5R35 × 300	35	300	32	5	3				
BTSPA0638000	CRS - 5R40 × 150	40	150	32	5	3				
BTSPA0640000	CRS - 5R40 × 200	40	200	32	5	3				

* Hitachi inserts recommended
* 建議使用 Hitach 銑刀片

A014 CRP Radius Endmill

CRP型R角端銑刀

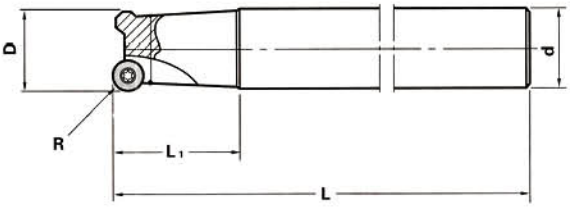

Code NO. 型號	TYPE 規格	D	R	L	L1	d	Teeth 刃數	Insert 刀片規格	Screw 螺絲	Wrench 扳手
BTSPA0668000	CRP - 5R25 × 150	25	5	150	40	25	2	RPMW-1003MO	SCR - CRP4 SCR - W3 / 16S	T15
BTSPA0670000	CRP - 5R25 × 200	25	5	200	60	25	2			
BTSPA0676000	CRP - 5R30 × 150	30	5	150	45	25	2			
BTSPA0678000	CRP - 5R30 × 200	30	5	200	45	25	2			
BTSPA0680000	CRP - 5R30 × 250	30	5	250	45	25	2			
BTSPA0682000	CRP - 5R30 × 300	30	5	300	45	25	2			
BTSPA0684000	CRP - 5R35 × 150	35	5	150	45	32	3			
BTSPA0686000	CRP - 5R35 × 200	35	5	200	45	32	3			
BTSPA0688000	CRP - 5R35 × 250	35	5	250	45	32	3			
BTSPA0690000	CRP - 5R35 × 300	35	5	300	45	32	3			
BTSPA0692000	CRP - 5R40 × 150	40	5	150	45	32	3			
BTSPA0694000	CRP - 5R40 × 200	40	5	200	45	32	3			
BTSPA0698000	CRP - 6R35 × 150	35	6	150	45	32	3	RPMW-1203MO	SCR - CRP4L SCR - W3 / 16S	
BTSPA0700000	CRP - 6R35 × 200	35	6	200	45	32	3			
BTSPA0702000	CRP - 6R35 × 250	35	6	250	45	32	3			
BTSPA0704000	CRP - 6R40 × 150	40	6	150	45	32	3			
BTSPA0706000	CRP - 6R40 × 200	40	6	200	45	32	3			

* Mitsubishi inserts recommended
* 建議使用 Mitsubishi 銑刀片

A015 CRT Radius Endmill

CRT型R角端銑刀

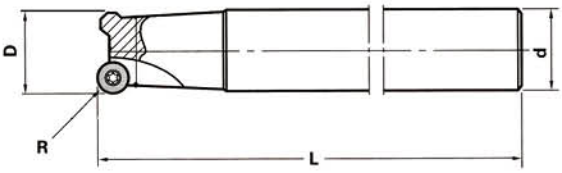

Code NO. 型號	TYPE 規格	D	d	R	L	Teeth 刃數	Insert 刀片規格	Screw 螺絲	Wrench 扳手
BTSPA0732000	CRT - 6R32 ×150	32	32	6	150	2	RPMT 1204MO	SCR - CRT4	T15
BTSPA0734000	CRT - 6R32 × 200	32	32	6	200	2			
BTSPA0738000	CRT - 6R35 × 150	35	32	6	150	3			
BTSPA0740000	CRT - 6R35 × 200	35	32	6	200	3			
BTSPA0746000	CRT - 6R40 × 150	40	32	6	150	3			
BTSPA0748000	CRT - 6R40 × 200	40	32	6	200	3			
BTSPA0752000	CRT - 6R50 ×150	50	32	6	150	4			
BTSPA0754000	CRT - 6R50 × 200	50	32	6	200	4			

* Mitsubishi inserts recommended
* 建議使用 Mitsubishi 銑刀片

A016 CRS Radius Face Milling Cutter
CRS型R角平面銑刀

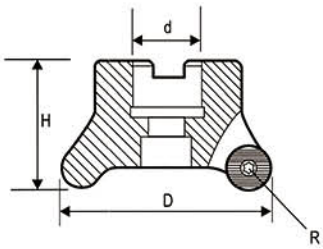

Code NO. 型號	TYPE 規格	D	d	H	R	Teeth 刃數	Insert 刀片規格	Screw 螺絲	Clamp 壓板	Wrench 扳手
BTSPA0782000	CRS - 5R50	50	25.4	45	5	4	RDMT10T3	SCR-CRS4	CL-5R	T15
BTSPA0783000	CRS - 5R50		22							
BTSPA0784000	CRS - 5R63	63	25.4	50	5	5				
BTSPA0785000	CRS - 5R63		22							
BTSPA0787000	CRS - 8R50	50	22	45	8	3	RDMT1604	SCR-CRS5	-	T20
BTSPA0788000	CRS - 8R63	63	25.4	50	8	3/4			CL-8R	
BTSPA0789000	CRS - 8R63		22							
BTSPA0790000	CRS - 8R66	66	25.4	50	8	4			-	
BTSPA0791000	CRS - 8R66		22							
BTSPA0792000	CRS - 8R80	80	25.4	50	8	5				
BTSPA0793000	CRS - 8R80		27							
BTSPA0794000	CRS - 8R100	100	31.75	55	8	5				
BTSPA0795000	CRS - 8R100		32							
BTSPA0796000	CRS - 8R116	116	31.75	60	8	6			CL-8R116H	
BTSPA0797000	CRS - 8R116		32						-	

* Mitsubishi inserts recommended
* 建議使用 Mitsubishi 銑刀片

A017 CRP Radius Face Milling Cutter
CRP型R角平面銑刀

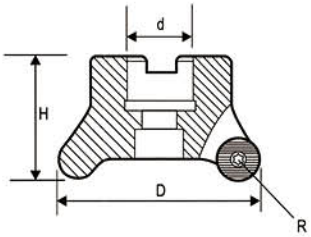

Code NO. 型號	TYPE 規格	D	d	H	R	Teeth 刃數	Insert 刀片規格	Screw 螺絲	Wrench 扳手
BTSPA0823000	CRP - 5R50	50	22	45	5	4	RPMW 1003MO	SCR - CRP4 SCR - W3 / 16S	T15
BTSPA0824000	CRP - 5R63	63	25.4	50		5			
BTSPA0826000	CRP - 6R50	50	-	45	6	4	RPMW 1203MO	SCR - CRP4L SCR - W3 / 16S	
BTSPA0828000	CRP - 6R63	63	25.4	50		5			

* Mitsubishi inserts recommended
* 建議使用 Mitsubishi 銑刀片

A018 CRT Radius Face Milling Cutter
CRT型R角平面銑刀

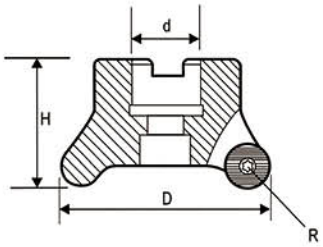

Code NO. 型號	TYPE 規格	D	d	H	R	Teeth 刃數	Insert 刀片規格	Screw 螺絲	Wrench 扳手
BTSPA0853000	CRT - 6R50	50	22	45	6	4	R P M T 1204MO	SCR-CRT4 SCR-CRT3.5	T15
BTSPA0854000	CRT - 6R63	63	25.4	50		5			
BTSPA0855000	CRT - 6R63		22						
BTSPA0856000	CRT - 6R80	80	25.4	50		6			
BTSPA0857000	CRT - 6R80		27						
BTSPA0858000	CRT - 6R100	100	31.75	55		7			
BTSPA0859000	CRT - 6R100		32						

* Mitsubishi inserts recommended
* 建議使用 Mitsubishi 銑刀片

A020 C2139 Ball-Nose Endmill
C2139球型端銑刀

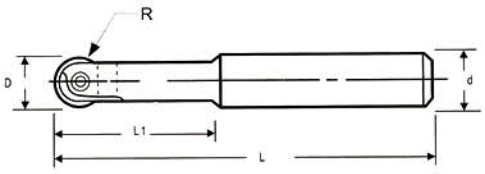

Code NO. 型號	TYPE 規格	R	D	d	L	L1	Insert 刀片規格	Screw 螺絲	Wrench 扳手
BTSPA0922000	C2139 - 4R8 × 130	4	8	8	130	30	P3200D08	SCR - CR4i	T8
BTSPA0924000	C2139 - 5R10 × 130	5	10	10	130	30	P3200D10	SCR - CR5i	T15
BTSPA0926000	C2139 - 5R12 × 130	5	10	12	130	30			
BTSPA0928000	C2139 -6R12 × 130	6	12	12	130	32	P3200D12	SCR - CR6i	T20
BTSPA0930000	C2139 - 8R16 × 150	8	16	16	150	36	P3200D16	SCR - CR8i	
BTSPA0932000	C2139 - 10R20 × 160	10	20	20	160	45	P3200D20	SCR - CR10i	
BTSPA0934000	C2139 - 10R20 × 200	10	20	20	200	45			
BTSPA0936000	C2139 - 12.5R25 × 180	12.5	25	25	180	45	P3200D25	SCR - CR 12.5i	T30

* Walter inserts recommended
* 建議使用 Walter 銑刀片

A021 C2139 Ball-Nose Endmill

C2139加長球型端銑刀

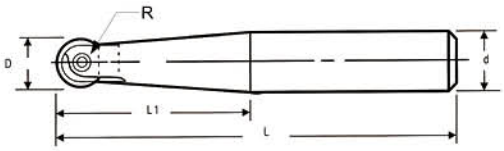

Code NO. 型號	TYPE 規格	R	D	d	L	L1	Insert 刀片規格	Screw 螺絲	Wrench 扳手
BTSPA0962000	C2139 - 4R12 ×140	4	8	12	140	45	P3200D08	SCR - CR4i	T8
BTSPA0964000	C2139 - 5R12 ×150	5	10	12	159	35	P3200D10	SCR - CR5i	T15
BTSPA0966000	C2139 - 6R16 ×160	6	12	16	160	58	P3200D12	SCR - CR6i	T20
BTSPA0968000	C2139 - 8R20 × 200	8	16	20	200	65	P3200D16	SCR - CR8i	
BTSPA0974000	C2139 -10R25 × 250	10	20	25	250	76	P3200D20	SCR - CR10i	

* Walter inserts recommended
* 建議使用 Walter 銑刀片

A022 CBP Ball-Nose Endmill

CBP球型端銑刀

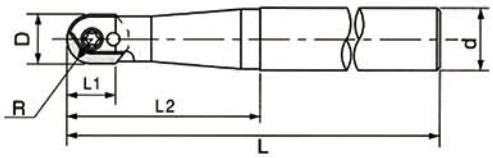

Code NO. 型號	TYPE 規格	R	D	d	L	L1	L2	Insert 刀片規格	Screw(Front) 前螺絲	Screw(Rear) 後螺絲	Wrench 扳手
BTSPA1002000	CBP - 8R16 ×130	8	16	16	130	13	40	ZPFW160	SCR - AR8	SCR - CBP3.5	T15
BTSPA1004000	CBP - 8R20 × 130	8	16	20	130	13	50				
BTSPA1006000	CBP - 8R20 × 160	8	16	20	160	13	65				

* Hitachi inserts recommended
* 建議使用 Hitach 銑刀片

A023 TB Twin- Blade Boring Bar

TB固定式雙刃粗搪刀桿

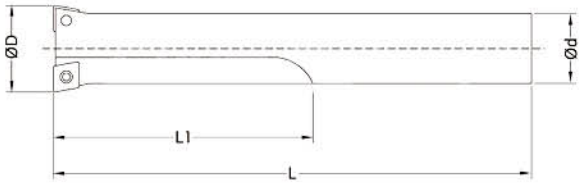

Code NO. 型號	TYPE 規格	D	d	L1	L	Insert 刀片規格	Screw 螺絲	Wrench 扳手
BTSPA1042000	TB - 1516.100	14.7	16	50	100	CCMT060204	SCR - TB2.5	T8
BTSPA1046000	TB - 1616.100	15.7	16	50	100			
BTSPA1050000	TB - 1716.100	16.7	16	50	100			
BTSPA1052000	TB - 1816.100	17.7	16	50	100			
BTSPA1054000	TB - 2016.110	19.7	16	60	110			
BTSPA1056000	TB - 2016.150	19.7	16	60	150			
BTSPA1060000	TB - 2316.110	22.7	16	60	110			
BTSPA1062000	TB - 2420.120	23.7	20	70	120			
BTSPA1064000	TB - 2520.120	24.7	20	70	120			
BTSPA1068000	TB - 3025.160	29.7	25	90	160	CCMT09T308	SCR - TB4	T15
BTSPA1070000	TB - 3025.190	29.7	25	90	190			
BTSPA1072000	TB - 3525.160	34.7	25	90	160			
BTSPA1074000	TB - 3532.230	34.7	32	90	230			
BTSPA1076000	TB - 4025.160	39.7	25	90	160			
BTSPA1078000	TB - 4035.250	39.7	35	90	250			

* ISO Code
* 符合 ISO 規範

A024 XEM High Efficiency Rough Endmill
XEM高效率快削型端銑刀

Code NO. 型號	TYPE 規格	ØD	Ød	L1	L	Teeth 刃數	Insert 刀片規格	Screw 螺絲	Wrench 扳手
BTSPA1103000	XEM10 - 1010.100	10	10	20	100	1	APMT1035	SCR - XEM2.5	T8
BTSPA1104000	XEM10 - 1212.100	12	12	25	100	1			
BTSPA1108000	XEM10 - 1616.100	16	16	25	100	2			
BTSPA1112000	XEM10 - 2020.110	20	20	30	110	3			
BTSPA1114000	XEM10 - 2020.150	20	20	50	150	3			
BTSPA1118000	XEM10 - 2525.150	25	25	60	150	4			
BTSPA1122000	XEM16 - 2525.150	25	25	60	150	2	APMT1605	SCR - XEM4	T15

* Nachi or Sumitomo inserts recommended
* 建議使用 Nachi 或 Sumitomo 銑刀片

RGH Shell-Type Rough Milling Cutter
RGH粗重切削筒狀銑刀

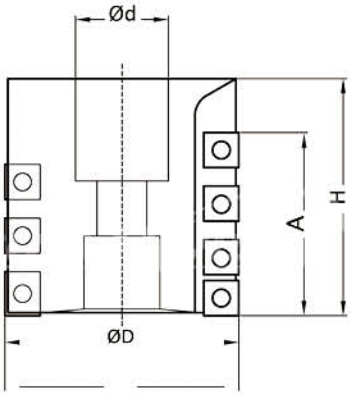

Code NO. 型號	TYPE 規格	ØD	A	H	Ød	Flute 槽數	Insert 刀片規格	Pcs 數量	Insert 刀片規格	Pcs 數量	Screw 螺絲	Wrench 扳手
BTSPA1152000	RGH - 80 × 31.75	80	67	80	31.75	6	LPMT - 1504	3	SPMT-1204	18	SCR - RGH5	T20
BTSPA1154000	RGH - 80 × 32	80	67	80	32							

* Walter inserts recommended
* 建議使用 Walter 銑刀片

A026 RGH BT50 Rough Milling Cutter

RGH BT50一體式粗重銑刀

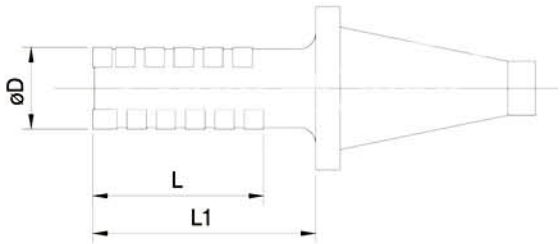

Code NO. 型號	TYPE 規格	ØD	L	L1	Flute 槽數	Insert 刀片規格	Pcs 數量	Insert 刀片規格	Pcs 數量
BTSPA1172000	BT50 - RGH50.77	50	77	H7					14
BTSPA1174000	BT50 - RGH50.97	50	97	137					18
BTSPA1176000	BT50 - RGH50.127	50	127	167			2		24
BTSPA1178000	BT50 - RGH50.157	50	157	197	4	LPMT 1504		SPMT 1204	30
BTSPA1182000	BT50 - RGH63.87	63	87	127					16
BTSPA1184000	BT50 - RGH63.107	63	107	147					20
BTSPA1186000	BT50 - RGH63.157	63	157	197					30
BTSPA1188000	BT50 - RGH80.107	80	107	147	6		3		30

Screw 螺絲	Wrench 扳手
SCR - RGH5	T20

* Walter inserts recommended
* 建議使用 Walter 銑刀片

A027 RGH Rough Milling Cutter

RGH粗切削端銑刀

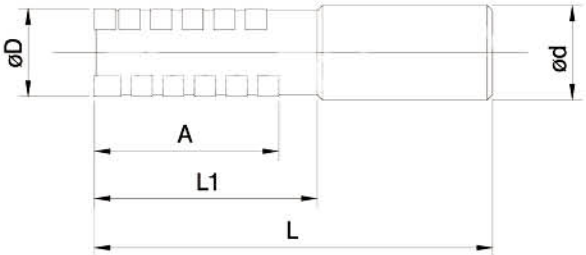

Code NO. 型號	TYPE 規格	ØD	Ød	A	L1	L	Flute 槽數	Insert 刀片規格	Pcs 數量	Insert 刀片規格	Pcs 數量	Screw 螺絲	Wrench 扳手
BTSPA1236000	RGH - 3242 × 150	32	32	42	70	150	2	LPMT 15T308	1	SDNT 090308	5	SCR - RGH4	T15
BTSPA1238000	RGH - 4050 ×155	40	32	50	75	155	4		2		12		
BTSPA1242000	RGH - 5077 × 205	50	50.8	77	115	205	4		2		14		
BTSPA1244000	RGH - 5097 × 225	50	50.8	97	135	225	4	LPMT 1504	2	SPMT 1204	18	SCR - RGH5	T20
BTSPA1246000	RGH - 50127 × 225	50	50.8	127	165	255	4		2		24		
BTSPA1248000	RGH - 50157 × 285	50	50.8	157	195	285	4		2		30		

* Walter inserts recommended
* 建議使用 Walter 銑刀片

A029 ESR High Efficiency Endmill

ESR高進給切削端銑刀

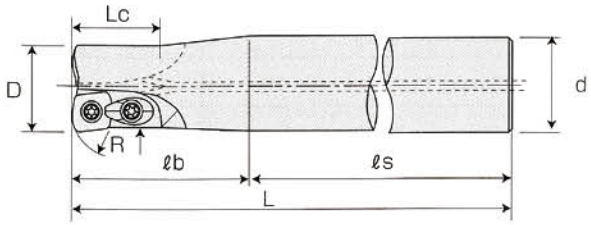

Code NO. 型號	TYPE 規格	D	L	R	ℓb	ℓs	LC	d	Teeth 刃數	Insert 刀片規格	Screw 螺絲	Clamp 壓板	Wrench 扳手
BTSPA1302000	ESR - 2020 ×130	20	130	10	50	80	20	20	2	E P N W 0803TN - 10	SCR - ESR3.5	CL - ESR3.5	T15
BTSPA1308000	ESR - 2525 × 140	25	140	10	60	80	25	25	2	E P N W 10T3TN - 10	SCR - ESR4		
BTSPA1310000	ESR - 2525 × 200	25	200	10	120	80	25	25	2				
BTSPA1320000	ESR - 3232 ×150	32	150	15	70	80	29	32	2	E D N W 13T4TN - 15 E D N W 13T4TN - 10	SCR - ESR5	CL - ESR5	T20
BTSPA1322000	ESR - 3232 × 200	32	200	15	120	80	29	32	2				
BTSPA1324000	ESR - 3232 × 300	32	300	15	180	120	29	32	2				
BTSPA1326000	ESR -3532 ×150	35	150	15	50	100	-	32	2				
BTSPA1328000	ESR - 3532 × 200	35	200	15	50	150	-	32	2				
BTSPA1330000	ESR - 3532 ×250	35	250	15	50	200	-	32	2				

* Hitachi inserts recommended
* 建議使用 Hitach 銑刀片

A030 ESR High Efficiency Milling Endmill

ESR高進給切削平面銑刀

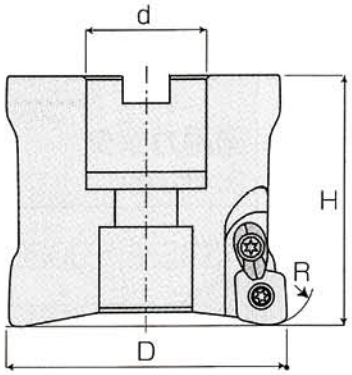

Code NO. 型號	TYPE 規格	D	H	R	d	Teeth 刃數	Insert 刀片規格	Screw 螺絲	Clamp 壓板	Wrench 扳手
BTSPA1362000	ESR-50	50	50	15(10)	22	4	EDNW13T4TN - 15 EDNW13T4TN - 10	SCR - ESR5	CL - ESR5	T20
BTSPA1364000	ESR - 63	63	50	15(10)	25.4	4	EDNW15T4TN - 15 EDNW15T4TN - 10			
BTSPA1366000	ESR - 66	66	50	15(10)	25.4	4				
BTSPA1368000	ESR -80	80	70	15(10)	25.4	5				

* Hitachi inserts recommended
* 建議使用 Hitach 銑刀片

A031 TCM 45° Chamfering Endmill

TCM 45°倒角刀

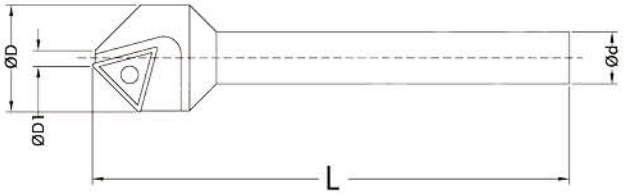

Code NO. 型號	TYPE 規格	ØD	ØD1	Ød	L	Insert 刀片規格	Screw 螺絲	Wrench 扳手
BTSPA1392000	TCM - 03 - 25	25	3	12	110	TCMT16T304	SCR - TCM4	T15

* ISO Code * 符合 ISO 規範

A032 CM 45° Chamfering Endmill

CM 45°倒角刀

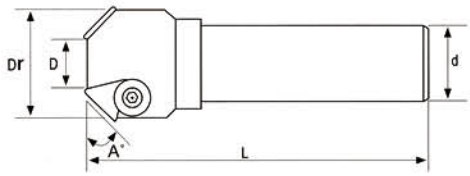

Code NO. 型號	TYPE 規格	A°	D	Dr	d	L	Teeth 刃數	Insert 刀片規格	Screw 螺絲	Wrench 扳手
BTSPA1402000	CM45 - 0521 × 16	45	5	21	16	120	1	TPUN1603	SCR - W1 / 4	WRN - M4L
BTSPA1404000	CM45 - 1031 × 20	45	10	31	20	120	2			
BTSPA1406000	CM45 - 2050 × 25	45	20	50	25	130	3	TPUN2204	SCR - W5 / 16	WRN - M5L
BTSPA1408000	CM45 - 0632 × 32	45	6	32	32	150	1			
BTSPA1410000	CM45 - 2050 × 32	45	20	50	32	150	3			
BTSPA1412000	CM45 - 3563 × 25	45	35	63	25	150	3			
BTSPA1414000	CM45 - 3563 × 32	45	35	63	32	150	3			

* ISO Code * 符合 ISO 規範

A033 CH Bolt Countersink Endmill

CH螺絲頭沉孔銑刀

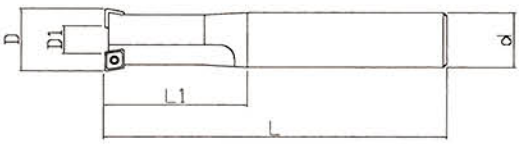

Code NO. 型號	TYPE 規格	D	L	L1	D1	d	Teeth 刃數	Insert 刀片規格	Screw 螺絲	Wrench 扳手
BTSPA1432000	CH - 8 - 14 - 25	14	108	21	2.9	25	1	CCMT 060204	SCR - CJU2.5	T8
BTSPA1434000	CH -10 - 17.5 - 25	17.5	115	26	5.3	25	2			
BTSPA1436000	CH - 12 - 20 - 25	20	120	30	7.8	25	2			
BTSPA1438000	CH - 14 - 23 - 25	23	126	34.5	10.8	25	2			
BTSPA1440000	CH - 16 - 26 - 32	26	132	39	8.5	32	2	CPMT 090308	SCR - CH4	T15
BTSPA1442000	CH - 18 - 29 - 32	29	138	43.5	11.5	32	2			
BTSPA1444000	CH - 20 - 32 - 32	32	144	59	14.5	32	2			

* Hitachi inserts recommended* ISO Code * 建議使用 Hitach 銑刀片 * 符合 ISO 規範

A034 TS T-Slot Endmill
TS T型槽端銑刀

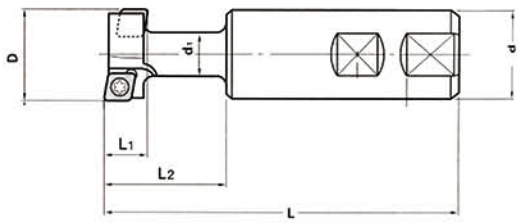

Code NO. 型號	TYPE 規格	D	L1	d	d1	L2	L	Teeth 刃數	Insert 刀片規格	Screw 螺絲	Wrench 扳手
BTSPA1462000	TS - 24 -11 - 20	24	11	20	12	29	90	4	CCMT - 060204	SCR - TS2.5	T8
BTSPA1464000	TS - 31 -14 - 25	31	14	25	15	42	110	4	CPMT - 080204Z		
BTSPA1466000	TS - 39 - 18 - 32	39	18	32	19	49	120	4	CPMT - 090308	SCR - TS4	T15
BTSPA1468000	TS - 49 - 22 - 32	49	22	32	25	60	140	4	CPMT - 120408	SCR - TS5	T20

* ISO Code
* 符合 ISO 規範

A035 SE45° High-Speed Face Milling Cutter
SE45° 高速平面殼型銑刀

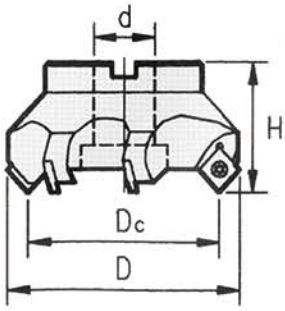

Code NO. 型號	TYPE 規格	Dc	D	d	H	Teeth 刃數	Insert 刀片規格	Screw 螺絲	Wrench 扳手
BTSPA1493000	SE - 50	50	60	22	45	4	SEKT1204	SCR- SE5	T20
BTSPA1494000	SE - 63	63	75	25.4	50	5			
BTSPA1495000	SE - 63			27					
BTSPA1496000	SE - 80	80	96	25.4	55	6			
BTSPA1497000	SE - 80			27					
BTSPA1498000	SE - 100	100	116	31.75	55	6			
BTSPA1499000	SE - 100			32					
BTSPA1500000	SE- 125	125	141	38.1	60	8			
BTSPA1501000	SE- 125			40					
BTSPA1502000	SE- 150	150	158	50.8	60	10			
BTSPA1503000	SE - 150			40					
BTSPA1504000	SE - 200	200	212	47.625	60	12			

* Metric* ISO Code
* 公制* 符合 ISO 規範

A036 SE 45° High-Speed Face Milling Cutter
SE 45°高速殼型銑刀

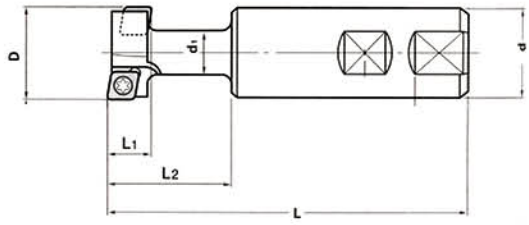

Code NO. 型號	TYPE 規格	D	Da	d	L	L1	Teeth 刃數	Insert 刀片規格	Screw 螺絲	Wrench 扳手
BTSPA1522000	SE - 5032 × 150	50	62	32	150	45	4	SEKT1204	SCR - SE5	T20
BTSPA1524000	SE - 5025 × 120	50	62	25	120	45	4			
BTSPA1526000	SE - 6332 × 150	63	74	32	150	45	5			
BTSPA1528000	SE - 6325 × 120	63	74	25	120	45	5			

* ISO Code
* 符合 ISO 規範

A037 SE445 Face Milling Cutter
SE445型高速平面銑刀

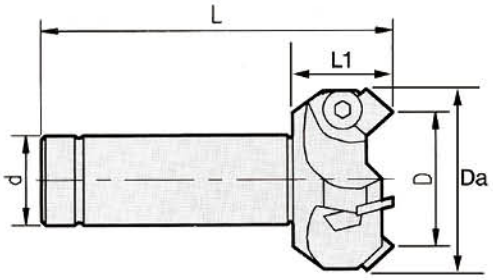

Code NO. 型號	TYPE 規格	D	Da	d	L	L1	Teeth 刃數	Insert 刀片規格	Screw 螺絲	Wrench 扳手
BTSPA1552000	SE445 - 5032 x 150	50	62	32	150	45	3	SEKN1203	SCR - W1 / 4L	WRN - M4L
BTSPA1554000	SE445 - 6332× 150	63	74	32	150	45	4			

* ISO Code
* 符合 ISO 規範

A038 TPR Shoulder Endmill

TPR直角端銑刀

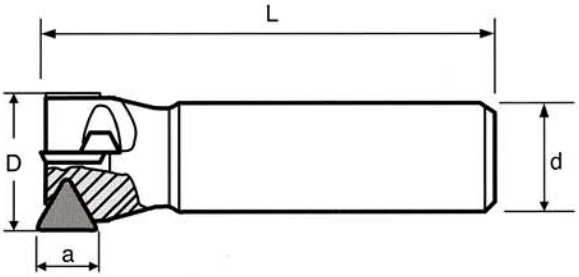

Code NO. 型號	TYPE 規格	D	d	L	a	Teeth 刃數	Insert 刀片規格	Screw 螺絲	Wrench 扳手
BTSPA1572000	TPR - 1616 × 110	16	16	110	11	1	TPMN1103	SCR-W3 / 16	WRN - M3L
BTSPA1576000	TPR - 2020 × 110	20	20	110	11	2			
BTSPA1580000	TPR - 2525 × 110	25	25	110	11	2			
BTSPA1582000	TPR - 3020 × 130	30	20	130	16	2	TPMN1603	SCR - W1 /4	WRN - M4L
BTSPA1584000	TPR - 3025 × 130	30	25	130	16	2			
BTSPA1592000	TPR - 3520 × 130	35	20	130	16	2			
BTSPA1594000	TPR - 3525 × 130	35	25	130	16	2			
BTSPA1596000	TPR - 3532 × 150	35	32	150	16	2			
BTSPA1606000	TPR - 4020 × 130	40	20	130	16	3			
BTSPA1608000	TPR - 4025 × 130	40	25	130	16	3			
BTSPA1610000	TPR - 4032 × 150	40	32	150	16	3			
BTSPA1620000	TPR - 4520 × 130	45	20	130	16	3			
BTSPA1622000	TPR - 4525 × 130	45	25	130	16	3			
BTSPA1624000	TPR - 4532 × 150	45	32	150	16	3			
BTSPA1626000	TPR - 5020 × 130	50	20	130	16	3			
BTSPA1628000	TPR - 5025 × 130	50	25	130	16	3			
BTSPA1630000	TPR - 5032 × 150	50	32	150	16	3			
BTSPA1632000	TPR - 5032 × 200	50	32	200	16	3			
BTSPA1638000	TPR - 6332 × 150	63	32	150	16	4			

* ISO Code
* 符合 ISO 規範

A039 TPR22 Shoulder Endmill
TPR22直角端銑刀

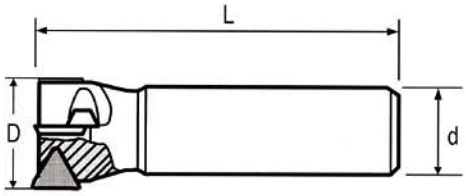

Code NO. 型號	TYPE 規格	D	d	L	Teeth 刃數	Insert 刀片規格	Screw 螺絲	Wrench 扳手
BTSPA1662000	TPR22 - 5032 × 150	50	32	150	3	TPMN2204	SCR-W5/16	WRN-M5L

* ISO Code
* 符合 ISO 規範

A040 TPR R8-Shank Shoulder Endmill
TPR R8柄直角端銑刀

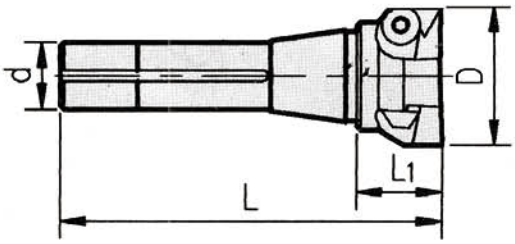

Code NO. 型號	TYPE 規格	D	L	L1	d	Teeth 刃數	Insert 刀片規格	Screw 螺絲	Wrench 扳手
BTSPA1702000	TPR - R8 × 1"	1"	145	45	24	2	TPMN1103	SCR-W3/ 16	WRN-M3L
BTSPA1704000	TPR - R8 × 1 -1 / 4"	1 - 1 / 4"	145	45	24	2	TPMN1603	SCR-W1 /4	WRN - M4L
BTSPA1706000	TPR - R8 × 1 -1 / 2"	1 - 1 / 2"	145	45	24	3			
BTSPA1710000	TPR - R8 × 2"	2"	145	45	24	3			
BTSPA1712000	TPR - R8 × 2 -1 / 2"	2 - 1 / 2"	145	45	24	4			
BTSPA1714000	TPR - R8 × 3"	3"	145	45	24	5			

* ISO Code
* 符合 ISO 規範

A041 TPR Shoulder Face Milling Cutter
TPR直角平面銑刀（無墊片）

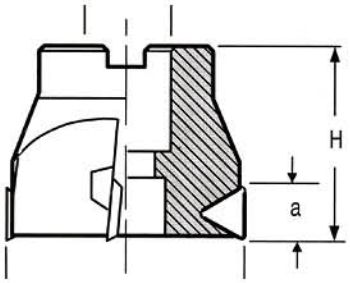

Code NO. 型號	TYPE 規格	D	d	H	H_1	Teeth 刃數	Insert 刀片規格	Screw 螺絲	Wrench 扳手
BTSPA1732000	TPR - 50W / S	50	22	50	16	3	TPMN1603	SCR - W1/4	WRN - M4L
BTSPA1734000	TPR - 63W / S	63	25.4	50	16	4			

* ISO Code
* 符合 ISO 規範

A042 TPR Shoulder Face Milling Cutter
TPR直角平面銑刀

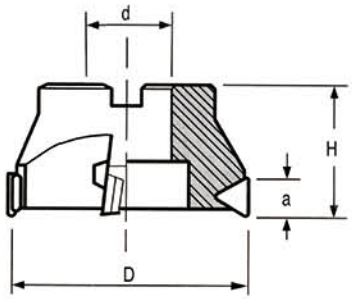

Code NO. 型號	TYPE 規格	D	d	H	H_1	Teeth 刃數	Insert 刀片規格	Shim 墊片	Clamp Screw 壓板螺絲	Wrench 扳手	Screw 螺絲
BTSPA1752000	TPR - 63	63	25.4	50	22	3	TPMN2204	ST - T	SCR - W5 / 16	WRN - M5L	SCR - ST - T4
BTSPA1754000	TPR - 3	80	25.4	50	22	4				WRN - M5T	
BTSPA1756000	TPR - 4	100	31.75	55	22	5					
BTSPA1758000	TPR - 5	125	38.1	60	22	6					
BTSPA1760000	TPR - 6	160	50.8	60	22	7					
BTSPA1762000	TPR - 8	200	47.625	60	22	8					
BTSPA1764000	TPR - 10	250	47.625	60	22	9					
BTSPA1766000	TPR - 12	300	47.625	60	22	10					

* ISO Code
* 符合 ISO 規範

A043 SC Side Milling Cutter
SC千鳥型側銑刀

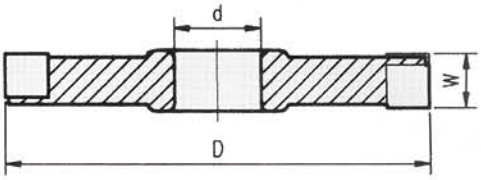

Code NO. 型號	TYPE 規格	D	d	W	Teeth 刃數	Insert 刀片規格	Clamp 壓板	Screw 螺絲	Wrench 扳手
BTSPA1792000	SC - 100 × 16	100	25.4	16	10	SPUN 120304	CL - S CL - SL	SCR - CL5 / 16	WRN - M4T
BTSPA1794000	SC - 125 ×16	125	25.4	16	14				
BTSPA1796000	SC - 150 ×16	150	25.4	16	16				
BTSPA1798000	SC - 200 × 16	200	31.75	16	20				

* ISO Code
* 符合 ISO 規範

A044 SCT T-Type Side Milling Cutter
SCT T型側銑刀

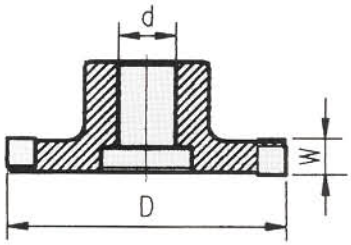

Code NO. 型號	TYPE 規格	D	d	W	Teeth 刃數	Insert 刀片規格	Clamp 壓板	Screw 螺絲	Wrench 扳手
BTSPA1822000	SCT - 100 × 16	100	1"	16	10	SPUN-1203	CL - S CL - SL	SCR - CL5 / 16	WRN - M4T
BTSPA1824000	SCT - 125 × 16	125	1 - 1 / 4"	16	14				
BTSPA1826000	SCT - 125 × 20	125	1 - 1 / 4"	20	14	SPUN-1504			
BTSPA1828000	SCT - 150 × 16	150	1 - 1 / 4"	16	16	SPUN-1203			
BTSPA1830000	SCT - 150 × 20	150	1 - 1 / 4"	20	16	SPUN-1504			
BTSPA1832000	SCT - 200 × 20	200	1 - 1 / 4"	20	20				
BTSPA1834000	SCT - 200 × 25	200	1 - 1 / 4"	25	20				

* ISO Code
* 符合 ISO 規範

A045 FP 75° Face Milling Cutter

FP 75。平面銑刀

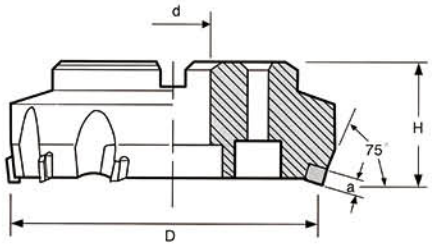

Code NO. 型號	TYPE 規格	D	d	H	a	Teeth 刃數
BTSPA1850000	FP - 3	80	25.4	50	12	5
BTSPA1854000	FP - 4	100	31.75	55	12	6
BTSPA1856000	FP - 5	125	38.1	60	12	8
BTSPA1858000	FP - 6	160	50.8	60	12	10
BTSPA1860000	FP - 8	200	47.625	60	12	12
BTSPA1862000	FP - 10	250	47.625	60	12	16
BTSPA1864000	FP - 12	300	47.625	60	12	20

Insert 刀片規格	Clamp Screw 壓板螺絲	Clamp 壓板	Shim Screw 墊片螺絲	Shim 墊片	Wrench 扳手
SPUN - 1203 SPKN - 1203 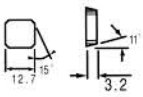	SCR- CL5 / 16	CL-S	SCR-ST-S4	ST-S	WRN-M4T

* ISO Code
* 符合 ISO 規範

A046 A047 535,435 25° Face Milling Cutter

535,435 65°平面銑刀

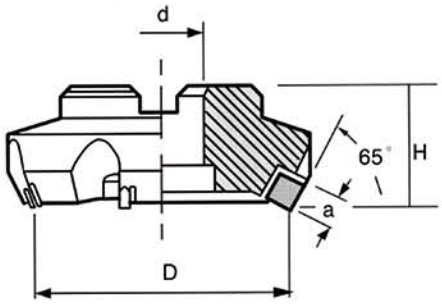

Code NO. 型號	TYPE 規格	D	d	H	a	Teeth 刃數
BTSPA1882000	535-3	80	25.4	50	15	5
BTSPA1884000	535-4	100	31.75	55	15	5
BTSPA1886000	535-5	125	38.1	60	15	6
BTSPA1888000	535-6	160	50.8	60	15	8
BTSPA1890000	535-8	200	47.625	60	15	10
BTSPA1892000	535-10	250	47.625	60	15	12
BTSPA1894000	535-12	300	47.625	60	15	14

Code NO. 型號	TYPE 規格	D	d	H	a	Teeth 刃數
BTSPA1912000	435-3	80	25.4	50	12	5
BTSPA1914000	435-4	100	31.75	55	12	5
BTSPA1916000	435-5	125	38.1	60	12	6
BTSPA1918000	435-6	160	50.8	60	12	8
BTSPA1920000	435-8	200	47.625	60	12	10
BTSPA1922000	435-10	250	47.625	60	12	12
BTSPA1924000	435-12	300	47.625	60	12	14

Clamp Screw 壓板螺絲	Clamp 壓板	Shim Screw 墊片螺絲	Shim 墊片	Wrench 扳手	Insert for CL5 S 刀片規格	Insert for CL4 S 刀片規格
SCR -CL5 / 16	CL5-S CL4-S	SCR -ST - S4	ST-S	WRN - M4T	SPKN1504 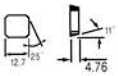	SPKN1204 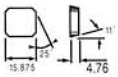

* ISO Code
* 符合 ISO 規範

A048 A049 545,445 45° Face Milling Cutter

545,445 45°平面銑刀

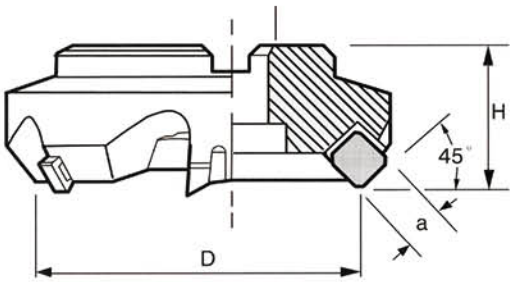

Code NO. 型號	TYPE 規格	D	d	H	a	Teeth 刃數
BTSPA1942000	545-3	80	25.4	50	15	5
BTSPA1944000	545-4	100	31.75	55	15	5
BTSPA1946000	545-5	125	38.1	60	15	6
BTSPA1948000	545-6	160	50.8	60	15	8
BTSPA1950000	545-8	200	47.625	60	15	10
BTSPA1952000	545-10	250	47.625	60	15	12
BTSPA1954000	54512	300	47.625	60	15	14

Code NO. 型號	TYPE 規格	D	d	H	a	Teeth 刃數
BTSPA1972000	445-3	80	25.4	50	12	5
BTSPA1974000	445-4	100	31.75	55	12	5
BTSPA1976000	445-5	125	38.1	60	12	6
BTSPA1978000	445-6	160	50.8	60	12	8
BTSPA1980000	445-8	200	47.625	60	12	10
BTSPA1982000	445-10	250	47.625	60	12	12
BTSPA1984000	445-12	300	47.625	60	12	14

Clamp Screw 壓板螺絲	Clamp 壓板	Shim Screw 墊片螺絲	Shim 墊片	Wrench 扳手	Insert for CL4 S 刀片規格	Insert for CL5 S 刀片規格
SCR -CL5 / 16	CL5-S CL4-S	SCR -ST - S4	ST - S	WRN -M4T	SEKN - 1504	SEKN - 1203

* ISO Code
* 符合 ISO 規範

A050 X-POWER Radius Milling Cutter

X-POWER 一體式圓刀刃銑刀

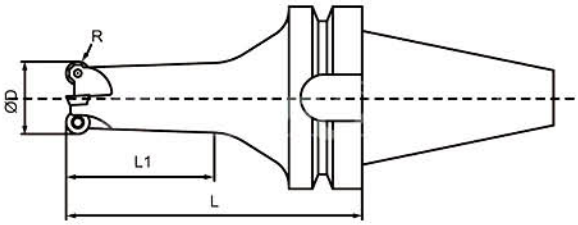

Code NO. 型號	TYPE 規格	ØD	L	L1	R	Teeth 刃數	Insert 刀片規格	Screw 螺絲	Wrench 扳手
BTSPA2002000	BT40 - XQP0820.90.3	20	90	40	4	3	QPMT0803	SCR - QP3	T8
BTSPA2004000	BT40 - XQP0825.100.4	25	100	50	4	4			
BTSPA2006000	BT40 - XQP0825.130.4	25	130	80	4	4			
BTSPA2008000	BT40 - XQP1025.100.3	25	100	50	5	3	QPMT10T3	SCR - QP3.5	T15
BTSPA2010000	BT40 - XQP1032.100.4	32	100	50	5	4			
BTSPA2012000	BT40 - XQP1032.130.4	32	130	80	5	4			

A051 C2334 Radius Endmill

C2334型R角端銑刀

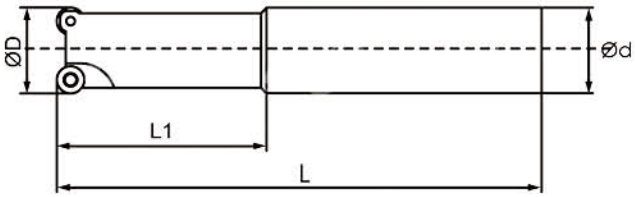

Code NO. 型號	TYPE 規格	ØD	Ød	L1	L	Teeth 刃數	Insert 刀片規格	Screw 螺絲	Wrench 扳手
BTSPA2032000	C2334 - 4R20 x 120	20	20	50	120	3	ROMX0803	SCR - R03	T8
BTSPA2034000	C2334 - 4R25 x 140	25	25	60	140	3			
BTSPA2036000	C2334 - 4R32 x 170	32	32	80	170	4			

* Walter inserts recommended
* 建議使用 Walter 刀片

A052 C2280 Octagon Face Milling Cutter
C2280 八角平面銑刀

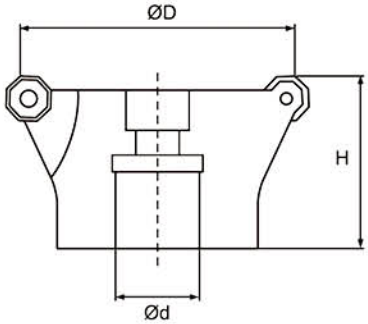

Code NO. 型號	TYPE 規格	ØD	Ød	H	Teeth 刃數	Insert 刀片規格	Screw 螺絲	Wrench 扳手
BTSPA2062000	C2280 - 50 × 22	50	22	40	4	ODMT0504 ODHT0504	SCR-OD3.5	T15
BTSPA2064000	C2280 - 63 × 25.4	63	25.4	40	6			
BTSPA2066000	C2280 - 63 × 22	63	22	40	6			
BTSPA2068000	C2280 - 80 × 25.4	80	25.4	50	7			
BTSPA2070000	C2280 - 80 × 27	80	27	50	7			
BTSPA2072000	C2280 - 100 × 31.75	100	31.75	50	8			
BTSPA2074000	C2280 - 100 × 32	100	32	50	8			
BTSPA2076000	C2280 - 125 × 38.1	125	38.1	63	10			
BTSPA2078000	C2280 - 125 × 40	125	40	63	10			
BTSPA2080000	C2280 - 160 × 50.8	160	50.8	63	12			
BTSPA2082000	C2280 - 160 × 40	160	40	63	12			
BTSPA2084000	C2280 - 200 × 47.625	200	47.625	63	14			
BTSPA2086000	C2280 - 200 × 60	200	60	63	14			

* Walter inserts recommended
* 建議使用 Walter 刀片

A053 SE13 High Speed Face Milling Cutter
SE13高速平面殼型銑刀

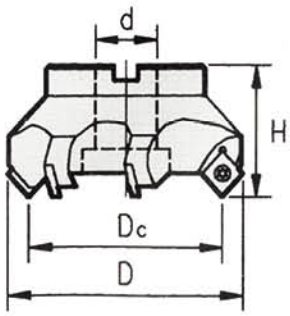

Code NO. 型號	TYPE 規格	ØD	Ød	H	Teeth 刃數	Insert 刀片規格	Screw 螺絲	Wrench 扳手
BTSPA2102000	SE13 - 63 × 25.4	63	25.4	50	5	SEMT13T3	SCR-SE4	T15
BTSPA2104000	SE13 - 63 × 22	63	22	50	5			
BTSPA2106000	SE13 - 80 × 25.4	80	25.4	55	6			
BTSPA2108000	SE13 - 80 × 27	80	27	55	6			
BTSPA2110000	SE13 - 100 × 31.75	100	31.75	55	6			
BTSPA2112000	SE13 - 100 × 32	100	32	55	6			
BTSPA2114000	SE13 - 125 × 38.1	125	38.1	60	8			
BTSPA2116000	SE13 - 125 × 40	125	40	60	8			
BTSPA2118000	SE13 - 150 × 50.8	150	50.8	60	10			
BTSPA2120000	SE13 - 150 × 40	150	40	60	10			
BTSPA2122000	SE13 - 200 × 47.62	200	47.625	60	12			
BTSPA2124000	SE13 - 200 × 60	200	60	60	12			

* Mitsubishi or Sandvik inserts recommended
* 建議使用 Mitsubishi 或 Sandvik 刀片

A054 RD Radius Corner Modular Endmill
RD型模組化R角銑刀

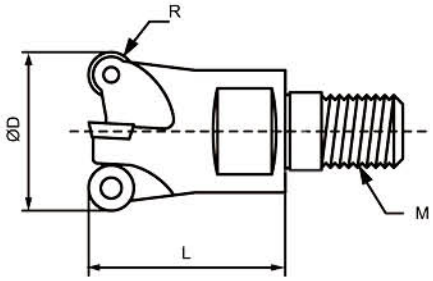

Code NO. 型號	TYPE 規格	ØD	L	M	R	Teeth 刃數	Insert 刀片規格	Screw 螺絲	Wrench 扳手
BTSPA2142000	RD05 - 1002M5	10	18	M5	2.5	2	RDHW0501	SCR-RD2.0	T6
BTSPA2144000	RD05 - 1102M5	11	18	M5	2.5	2			
BTSPA2146000	RD05 - 1203M6	12	19	M6	2.5	3			
BTSPA2148000	RD05 - 1303M6	13	19	M6	2.5	3			
BTSPA2150000	RD07 - 1603M8	16	23	M8	3.5	3	RDMT0702	SCR-RD2.5	T8
BTSPA2152000	RD07 - 1703M8	17	23	M8	3.5	3			
BTSPA2154000	RD07 - 2003M10	20	30	M10	3.5	3			
BTSPA2156000	RD07 - 2103M10	21	30	M10	3.5	3			
BTSPA2158000	RD07 - 2504M12	25	35	M12	3.5	4			
BTSPA2160000	RD07 - 2505M12	25	35	M12	3.5	5			
BTSPA2162000	RD07 - 2604M12	26	35	M12	3.5	4			
BTSPA2164000	RD07 - 3505M16	35	43	M16	3.5	5			
BTSPA2166000	RD10 - 35C03M16	35	43	M16	5	3	RDMT1003	SCR-RD3.5	T15
BTSPA2168000	RD10 - 35C04M16	35	43	M16	5	4			

* Safety inserts recommended
* 建議使用 Safety 刀片

A055 RT Lightning Modular Endmill
RT型模組化精面加工銑刀

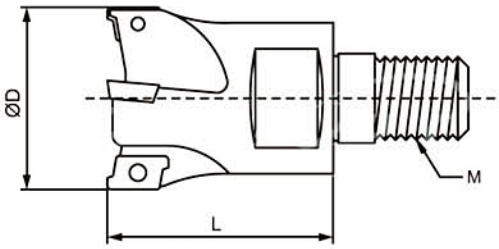

Code NO. 型號	TYPE 規格	ØD	L	M	Teeth 刃數	Insert 刀片規格	Screw 螺絲	Wrench 扳手
BTSPA2192000	RT07 - 1002M5	10	18	M5	2	RT0702	SCR-RT2.0	T6
BTSPA2194000	RT07 - 1102M5	11	18	M5	2			
BTSPA2196000	RT07 - 1202M6	12	19	M6	2			
BTSPA2198000	RT07 - 1302M6	13	19	M8	2			
BTSPA2200000	RT07 - 1603M8	16	25	M8	3			
BTSPA2202000	RT07 - 1703M8	17	25	M8	3			
BTSPA2204000	RT10 - 1602M8	16	25	M8	2	RT1003	SCR-RT2.5	T8
BTSPA2206000	RT10 - 1702M8	17	25	M8	2			
BTSPA2208000	RT10 - 2003M10	20	30	M10	3			
BTSPA2210000	RT10 - 2103M10	21	30	M10	3			
BTSPA2212000	RT10 - 2503M12	25	35	M12	3			
BTSPA2214000	RT10 - 2603M12	26	35	M12	3			
BTSPA2216000	RT10 - 3504M16	35	43	M16	4			

* Safety inserts recommended
* 建議使用 Safety 刀片

A056 EXT Modular Extension Bar
EXT型模组化延長桿

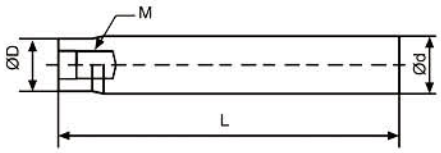

Code NO. 型號	TYPE 規格	ØD	Ød	M	L
BTSPA2242000	EXT - D10M5 - 100	9.5	10	M5	100
BTSPA2244000	EXT - D12M6 - 100	11.5	12	M6	100
BTSPA2246000	EXT - D16M8 - 130	14	16	M8	130
BTSPA2248000	EXT - D16M8 - 180	14	16	M8	180
BTSPA2250000	EXT - D20M10 - 130	18	20	M10	130
BTSPA2252000	EXT - D20M10 - 180	18	20	M10	180
BTSPA2254000	EXT - D25M12 - 200	23	25	M12	200
BTSPA2256000	EXT - D25M12 - 250	23	25	M12	250
BTSPA2258000	EXT - D25M12 - 300	23	25	M12	300
BTSPA2260000	EXT - D32M16 - 200	29	32	M16	200
BTSPA2262000	EXT - D32M16 - 250	29	32	M16	250
BTSPA2264000	EXT - D32M16 - 300	29	32	M16	300
BTSPA2266000	EXT - D32M16 - 350	29	32	M16	350

A057 RD Radius Corner Endmill
RD型R角端銑刀

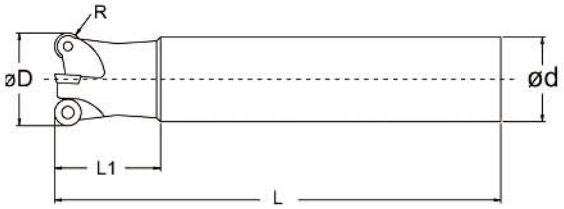

Code NO. 型號	TYPE 規格	ØD	Ød	L	L1	R	Teeth 刃數	Insert 刀片規格	Screw 螺絲	Wrench 扳手
BTSPA2296000	RD05 - 1203.12 × 100	12	12	100	30	2.5	3	RDWH0501	SCR-RD2.0	T6
BTSPA2298000	RD05 - 1303.12 × 100	13	12	100	30	2.5	3			
BTSPA2300000	RD07 - 1603.16 × 150	16	16	150	30	3.5	3	RDWT0702	SCR-RD2.5	T8
BTSPA2302000	RD07 - 1703.16 × 150	17	16	150	30	3.5	3			
BTSPA2304000	RD07 - 1703.16 × 200	17	16	200	30	3.5	3			
BTSPA2306000	RD07 - 2003.20 × 150	20	20	150	30	3.5	3			
BTSPA2308000	RD07 - 2103.20 × 150	21	20	150	30	3.5	3			
BTSPA2310000	RD07 - 2103.20 × 200	21	20	200	30	3.5	3			
BTSPA2312000	RD07 - 2504.25 × 150	25	25	150	30	3.5	4			
BTSPA2314000	RD07 - 2604.25 × 150	26	25	150	30	3.5	4			
BTSPA2316000	RD07 - 2604.25 × 200	26	25	200	30	3.5	4			
BTSPA2318000	RD10 - 35C03.32 × 150	35	32	150	50	5	3	RDWT1003	SCR-RD3.5	T15
BTSPA2320000	RD10 - 35C03.32 × 200	35	32	200	50	5	3			
BTSPA2322000	RD10 - 35C03.32 × 250	35	32	250	50	5	3			
BTSPA2324000	RD10 - 35C03.32 × 300	35	32	300	50	5	3			
BTSPA2326000	RD10 - 35C04.32 × 150	35	32	150	50	5	4			
BTSPA2328000	RD10 - 35C04.32 × 200	35	32	200	50	5	4			

* Safety inserts recommended
* 建議使用 Safety 刀片

A058 RT Lightning Endmill

RT型精面加工端銑刀

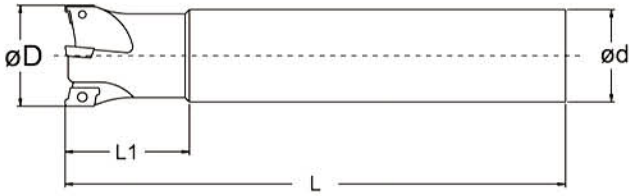

Code NO. 型號	TYPE 規格	ØD	Ød	L	L1	Teeth 刃數	Insert 刀片規格	Screw 螺絲	Wrench 扳手
BTSPA2352000	RT07 - 1002.10 × 120	10	10	120	30	2	RT0702	SCR-RT2.0	T6
BTSPA2354000	RT07 - 1102.10 × 120	11	10	120	30	2			
BTSPA2356000	RT07 - 1202.12 × 130	12	12	130	30	2			
BTSPA2358000	RT07 - 1302.12 × 130	13	12	130	30	2			
BTSPA2360000	RT07 - 1603.16 × 150	16	16	150	30	3			
BTSPA2362000	RT07 - 1703.16 × 150	17	16	150	30	3			
BTSPA2364000	RT10 - 1602.16 × 150	16	16	150	50	2	RT1003	SCR-RT2.5	T8
BTSPA2366000	RT10 - 1702.16 × 150	17	16	150	50	2			
BTSPA2368000	RT10 - 1702.16 × 200	17	16	200	50	2			
BTSPA2370000	RT10 - 2003.20 × 150	20	20	150	50	3			
BTSPA2372000	RT10 - 2103.20 × 150	21	20	150	50	3			
BTSPA2374000	RT10 - 2103.20 × 200	21	20	200	50	3			
BTSPA2376000	RT10 - 2103.20 × 250	21	20	250	50	3			
BTSPA2378000	RT10 - 2503.25 × 200	25	25	200	50	3			
BTSPA2380000	RT10 - 2603.25 × 150	26	25	150	50	3			
BTSPA2382000	RT10 - 2603.25 × 200	26	25	200	50	3			
BTSPA2384000	RT10 - 2603.25 × 250	26	25	250	50	3			
BTSPA2386000	RT10 - 2603.25 × 300	26	25	300	50	3			
BTSPA2388000	RT10 - 3504.32 × 150	35	32	150	50	4			
BTSPA2390000	RT10 - 3504.32 × 200	35	32	200	50	4			
BTSPA2392000	RT10 - 3504.32 × 250	35	32	250	50	4			
BTSPA2394000	RT10 - 3504.32 × 300	35	32	300	50	4			

* Safety inserts recommended
* 建議使用 Safety 刀片

A059 APX 12 High-Speed Rough Endmill
APX 12型高速端銑刀

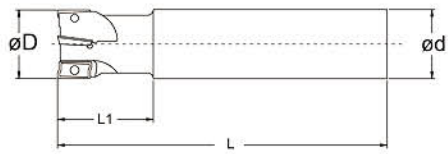

Code NO. 型號	TYPE 規格	ØD	Ød	L	L1	Teeth 刃數	Insert 刀片規格	Screw 螺絲	Wrench 扳手
BTSPA2412000	APX12 - 1616 × 120	16	16	120	24	2	AOMT 1236	SCR-APX2.5	T8
BTSPA2414000	APX12 - 1616 × 150	16	16	150	24	2			
BTSPA2416000	APX12 - 1716 × 150	17	16	150	24	2			
BTSPA2418000	APX12 - 2020 × 150	20	20	150	29	3			
BTSPA2420000	APX12 - 2120 × 150	21	20	150	29	3			
BTSPA2422000	APX12 - 2120 × 200	21	20	200	29	3			
BTSPA2424000	APX12 - 2525 × 150	25	25	150	34	4			
BTSPA2426000	APX12 - 2525 × 200	25	25	200	34	4			
BTSPA2428000	APX12 - 2625 × 200	26	25	200	34	4			

* Mitsubishi inserts recommended
* 建議使用 Mitsubishi 刀片

A060 C4033 Powerful Face Milling Cutter
C4033強力平面銑刀

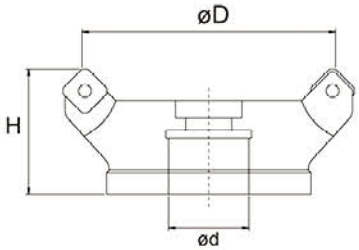

Code NO. 型號	TYPE 規格	ØD	Ød	H	Teeth 刃數	Insert 刀片規格	Screw 螺絲	Wrench 扳手
BTSPA2452000	C4033 - 50 × 22	50	22	40	4	SNMX 1205 SNGX 1205	SCR-SN4	T15
BTSPA2454000	C4033 - 63 × 25.4	63	25.4	40	6			
BTSPA2456000	C4033 - 63 × 22	63	22	40	6			
BTSPA2458000	C4033 - 80 × 25.4	80	25.4	50	6			
BTSPA2460000	C4033 - 80 × 27	80	27	50	6			
BTSPA2462000	C4033 - 100 × 31.75	100	31.75	50	8			
BTSPA2464000	C4033 - 100 × 32	100	32	50	8			
BTSPA2466000	C4033 - 125 × 38.1	125	38.1	63	10			
BTSPA2468000	C4033 - 125 × 40	125	40	63	10			
BTSPA2470000	C4033 - 160 × 50.8	160	50.8	63	12			
BTSPA2472000	C4033 - 160 × 40	160	40	63	12			
BTSPA2474000	C4033 - 200 × 47.625	200	47.625	63	18			
BTSPA2476000	C4033 - 200 × 60	200	60	63	18			

* Walter inserts recommended
* 建議使用 Walter 刀片

A062 EXD Power Super Drill 3D

EXD型快速鑽(3倍)

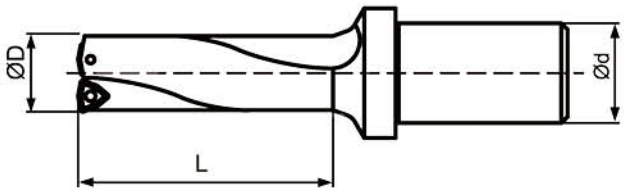

Code NO. 型號	TYPE 規格	ØD	Ød	L	Insert 刀片規格	Screw 螺絲	Wrench 扳手
BTSPA2562000	EXD - 14 × 3 - 25	14	25	42	WCMX0302	SCR-EXD2.5	T8
BTSPA2564000	EXD - 15 × 3 - 25	15	25	45			
BTSPA2566000	EXD - 16 × 3 - 25	16	25	48			
BTSPA2568000	EXD - 17 × 3 - 25	17	25	51			
BTSPA2570000	EXD - 18 × 3 - 25	18	25	54			
BTSPA2572000	EXD - 19 × 3 - 25	19	25	57			
BTSPA2574000	EXD - 20 × 3 - 25	20	25	60	WCMX0402	SCR-EXD2.5	
BTSPA2576000	EXD - 21 × 3 - 32	21	32	63			
BTSPA2578000	EXD - 22 × 3 - 32	22	32	66			
BTSPA2580000	EXD - 23 × 3 - 32	23	32	69			
BTSPA2582000	EXD - 24 × 3 - 32	24	32	72			
BTSPA2584000	EXD - 25 × 3 - 32	25	32	75			
BTSPA2586000	EXD - 26 × 3 - 32	26	32	78	WCMX0503	SCR-EXD3	
BTSPA2588000	EXD - 27 × 3 - 32	27	32	81			
BTSPA2590000	EXD - 28 × 3 - 32	28	32	84			
BTSPA2592000	EXD - 29 × 3 - 32	29	32	87			
BTSPA2594000	EXD - 30 × 3 - 32	30	32	90			
BTSPA2596000	EXD - 31 × 3 - 32	31	32	93	WCMX06T3	SCR-EXD3.5	T15
BTSPA2598000	EXD - 32 × 3 - 32	32	32	96			
BTSPA2600000	EXD - 33 × 3 - 32	33	32	99			
BTSPA2602000	EXD - 34 × 3 - 32	34	32	102			
BTSPA2604000	EXD - 35 × 3 - 32	35	32	105			
BTSPA2606000	EXD - 36 × 3 - 32	36	32	108			
BTSPA2608000	EXD - 37 × 3 - 32	37	32	111			
BTSPA2610000	EXD - 38 × 3 - 32	38	32	114			
BTSPA2612000	EXD - 39 × 3 - 32	39	32	117			
BTSPA2614000	EXD - 40 × 3 - 40	40	40	120			
BTSPA2616000	EXD - 41 × 3 - 40	41	40	123			
BTSPA2618000	EXD - 42 × 3 - 40	42	40	126			
BTSPA2620000	EXD - 43 × 3 - 40	43	40	129	WCMX0804	SCR-EXD4	
BTSPA2622000	EXD - 44 × 3 - 40	44	40	132			
BTSPA2624000	EXD - 45 × 3 - 40	45	40	135			
BTSPA2626000	EXD - 46 × 3 - 40	46	40	138			
BTSPA2628000	EXD - 47 × 3 - 40	47	40	141			
BTSPA2630000	EXD - 48 × 3 - 40	48	40	144			
BTSPA2632000	EXD - 49 × 3 - 40	49	40	147			
BTSPA2634000	EXD - 50 × 3 - 40	50	40	150			
BTSPA2636000	EXD - 51 × 3 - 40	51	40	153			
BTSPA2638000	EXD - 52 × 3 - 40	52	40	156			
BTSPA2640000	EXD - 53 × 3 - 40	53	40	159			
BTSPA2642000	EXD - 54 × 3 - 40	54	40	162			
BTSPA2644000	EXD - 55 × 3 - 40	55	40	165	WCMX06T3	SCR-EXD3.5	
BTSPA2646000	EXD - 56 × 3 - 40	56	40	168			
BTSPA2648000	EXD - 57 × 3 - 40	57	40	171			
BTSPA2650000	EXD - 58 × 3 - 40	58	40	174			
BTSPA2652000	EXD - 59 × 3 - 40	59	40	177			
BTSPA2654000	EXD - 60 × 3 - 40	60	40	180			

* ISO Code
* 符合 ISO 規範

A063 EXD Power Super Drill 4D

EXD型快速鑽(4倍)

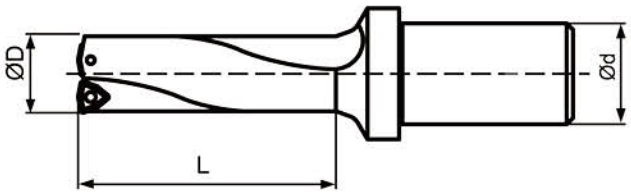

Code NO. 型號	TYPE 規格	ØD	Ød	L	Insert 刀片規格	Screw 螺絲	Wrench 扳手
BTSPA2672000	EXD - 15 × 4 - 25	15	25	60	WCMX0302	SCR-EXD2.5	T8
BTSPA2674000	EXD - 16 × 4 - 25	16	25	64			
BTSPA2676000	EXD - 17 × 4 - 25	17	25	68			
BTSPA2678000	EXD - 18 × 4 - 25	18	25	72			
BTSPA2680000	EXD - 19 × 4 - 25	19	25	76			
BTSPA2682000	EXD - 20 × 4 - 25	20	25	80			
BTSPA2684000	EXD - 21 × 4 - 32	21	32	84	WCMX0402	SCR-EXD2.5	T8
BTSPA2686000	EXD - 22 × 4 - 32	22	32	88			
BTSPA2688000	EXD - 23 × 4 - 32	23	32	92			
BTSPA2690000	EXD - 24 × 4 - 32	24	32	96			
BTSPA2692000	EXD - 25 × 4 - 32	25	32	100			
BTSPA2694000	EXD - 26 × 4 - 32	26	32	104	WCMX0503	SCR-EXD3	T8
BTSPA2696000	EXD - 27 × 4 - 32	27	32	108			
BTSPA2698000	EXD - 28 × 4 - 32	28	32	112			
BTSPA2700000	EXD - 29 × 4 - 32	29	32	116			
BTSPA2702000	EXD - 30 × 4 - 32	30	32	120			
BTSPA2704000	EXD - 31 × 4 - 32	31	32	124	WCMX06T3	SCR-EXD3.5	T15
BTSPA2706000	EXD - 32 × 4 - 32	32	32	128			
BTSPA2708000	EXD - 33 × 4 - 32	33	32	132			
BTSPA2710000	EXD - 34 × 4 - 32	34	32	136			
BTSPA2712000	EXD - 35 × 4 - 32	35	32	140			
BTSPA2714000	EXD - 36 × 4 - 32	36	32	144			
BTSPA2716000	EXD - 37 × 4 - 32	37	32	148			
BTSPA2718000	EXD - 38 × 4 - 32	38	32	152	WCMX06T3	SCR-EXD3.5	T15
BTSPA2720000	EXD - 39 × 4 - 32	39	32	156			
BTSPA2722000	EXD - 40 × 4 - 40	40	32	160			
BTSPA2724000	EXD - 41 × 4 - 40	41	40	164			
BTSPA2726000	EXD - 42 × 4 - 40	42	40	168			
BTSPA2728000	EXD - 43 × 4 - 40	43	40	172	WCMX0804	SCR-EXD4	T15
BTSPA2730000	EXD - 44 × 4 - 40	44	40	176			
BTSPA2732000	EXD - 45 × 4 - 40	45	40	180			
BTSPA2734000	EXD - 46 × 4 - 40	46	40	184			
BTSPA2736000	EXD - 47 × 4 - 40	47	40	188			
BTSPA2738000	EXD - 48 × 4 - 40	48	40	192			
BTSPA2740000	EXD - 49 × 4 - 40	49	40	196			
BTSPA2742000	EXD - 50 × 4 - 40	50	40	200			
BTSPA2744000	EXD - 51 × 4 - 40	51	40	204			
BTSPA2746000	EXD - 52 × 4 - 40	52	40	208			
BTSPA2748000	EXD - 53 × 4 - 40	53	40	212			
BTSPA2750000	EXD - 54 × 4 - 40	54	40	216			
BTSPA2752000	EXD - 55 × 4 - 40	55	40	220	WCMX06T3	SCR-EXD3.5	T15
BTSPA2754000	EXD - 56 × 4 - 40	56	40	224			
BTSPA2756000	EXD - 57 × 4 - 40	57	40	228			
BTSPA2758000	EXD - 58 × 4 - 40	58	40	232			
BTSPA2760000	EXD - 59 × 4 - 40	59	40	236			
BTSPA2762000	EXD - 60 × 4 - 40	60	40	240			

* ISO Code
* 符合 ISO 規範

A064 WEX High-Speed Rough Endmill
WEX型高速端銑刀

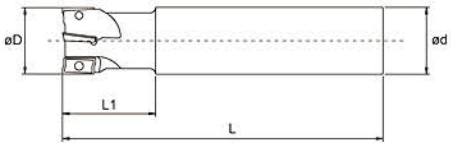

Code NO. 型號	TYPE 規格	ØD	Ød	L	L1	Teeth 刃數	Insert 刀片規格	Screw 螺絲	Wrench 扳手
BTSPA2782000	WEX12 - 1616 × 100	16	16	100	25	2	AXMT1235	SCR-WEX3	T8
BTSPA2784000	WEX12 - 1816 × 100	18	16	100	25	2			
BTSPA2786000	WEX12 - 2020 × 110	20	20	110	30	3			
BTSPA2788000	WEX12 - 2020 × 150	20	20	150	40	3			
BTSPA2790000	WEX12 - 2220 × 110	22	20	110	30	3			
BTSPA2792000	WEX12 - 2525 × 120	25	25	120	35	4			
BTSPA2794000	WEX12 - 2525 × 170	25	25	170	50	4			
BTSPA2796000	WEX12 - 2825 × 120	28	25	120	35	4			
BTSPA2798000	WEX12 - 3232 × 130	32	32	130	40	5			
BTSPA2800000	WEX12 - 3232 × 180	32	32	180	60	5			
BTSPA2802000	WEX17 - 2525 × 120	25	25	120	35	2	AXMT1705	SCR-WEX4	T15
BTSPA2804000	WEX17 - 2625 × 120	26	25	120	35	2			
BTSPA2806000	WEX17 - 2825 × 120	28	25	120	35	2			
BTSPA2808000	WEX17 - 3232 × 130	32	32	130	40	3			
BTSPA2810000	WEX17 - 3232 × 180	32	32	180	60	3			
BTSPA2812000	WEX17 - 3532 × 130	35	32	130	40	3			
BTSPA2814000	WEX17 - 4032 × 170	40	32	170	50	4			

* Nachi or Sumitomo inserts recommended
* 建議使用 Nachi 或 Sumitomo 銑刀片

A065 WEX High-Speed Rough Face Milling Cutter
WEX型高速平面銑刀

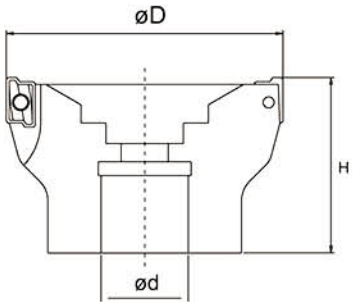

Code NO. 型號	TYPE 規格	ØD	Ød	H	Teeth 刃數	Insert 刀片規格	Screw 螺絲	Wrench 扳手
BTSPA2832000	WEX12 - 50 × 22	50	22	40	7	AXMT1235	SCR-WEX3	T8
BTSPA2834000	WEX12 - 63 × 22	63	22	40	8			
BTSPA2836000	WEX17 - 50 × 22	50	22	40	5	AXMT1705	SCR-WEX4	T15
BTSPA2838000	WEX17 - 63 × 22	63	22	40	6			
BTSPA2840000	WEX17 - 80 × 25.4	80	25.4	50	7			
BTSPA2842000	WEX17 - 100 × 31.75	100	31.75	63	8			
BTSPA2844000	WEX17 - 125 × 38.1	125	38.1	63	9			

* Nachi or Sumitomo inserts recommended
* 建議使用 Nachi 或 Sumitomo 銑刀片

Screw
螺絲

Code NO. 型號	TYPE 規格
BTSDA0167000	SCR-APX2.5
BTSDA0168000	SCR-AR10
BTSDA0169000	SCR-AR12.5
BTSDA0170000	SCR-AR8
BTSDA0171000	SCR-CAP2.5
BTSDA0172000	SCR-CAP4
BTSDA0173000	SCR-CBP3.5
BTSDA0174000	SCR-CBP5
BTSDA0175000	SCR-CEX3.5
BTSDA0176000	SCR-CEX4
BTSDA0177000	SCR-CJU2.5
BTSDA0178000	SCR-CJU3.5
BTSDA0179000	SCR-CJU4
BTSDA0180000	SCR-CJU5
BTSDA0181000	SCRCL5/16
BTSDA0182000	SCR-CR10
BTSDA0183000	SCR-CR12.5
BTSDA0184000	SCR-CR4
BTSDA0185000	SCR-CR5
BTSDA0186000	SCR-CR6
BTSDA0187000	SCR-CR8
BTSDA0188000	SCR-CRC4
BTSDA0189000	SCR-CRC5
BTSDA0190000	SCR-CRP3
BTSDA0191000	SCR-CRP4
BTSDA0192000	SCR-CRS3

Code NO. 型號	TYPE 規格
BTSDA0193000	SCR-CRS4
BTSDA0194000	SCR-CRS5
BTSDA0195000	SCR-CRT4
BTSDA0196000	SCR-CSJ2.5
BTSDA0197000	SCR-CSJ3
BTSDA0198000	SCR-CSJ4
BTSDA0199000	SCR-EHU2.5
BTSDA0200000	SCR-EHU4
BTSDA0201000	SCR-ESR3.5
BTSDA0202000	SCR-ESR4
BTSDA0203000	SCR-ESR5
BTSDA0204000	SCR-EXD2.5
BTSDA0205000	SCR-EXD3
BTSDA0206000	SCR-EXD3.5
BTSDA0207000	SCR-EXD4
BTSDA0208000	SCR-IMP3
BTSDA0209000	SCR-IMP4
BTSDA0210000	SCR-OD2.5
BTSDA0211000	SCR-QP3
BTSDA0212000	SCR-QP3.5
BTSDA0213000	SCR-RD2.0
BTSDA0214000	SCR-RD2.5
BTSDA0215000	SCR-RD3.5
BTSDA0216000	SCR-RGH2.5
BTSDA0217000	SCR-RGH4
BTSDA0218000	SCR-RGH5

Code NO. 型號	TYPE 規格
BTSDA0219000	SCR-RGZ4
BTSDA0220000	SCR-RGZ5
BTSDA0221000	SCR-RO3
BTSDA0222000	SCR-RT2.0
BTSDA0223000	SCR-RT2.5
BTSDA0224000	SCR-SE4
BTSDA0225000	SCR-SE5
BTSDA0226000	SCR-SFM5
BTSDA0227000	SCR-SN3.5
BTSDA0228000	SCR-ST-S4
BTSDA0229000	SCR-ST-T4
BTSDA0230000	SCR-TB2.5
BTSDA0231000	SCR-TB3.5
BTSDA0232000	SCR-TCM4
BTSDA0233000	SCR-TS2.5
BTSDA0234000	SCR-TS4
BTSDA0235000	SCR-TS5
BTSDA0236000	SCR-W1 / 4
BTSDA0237000	SCR-W1 / 4L
BTSDA0238000	SCR-W3 / 16
BTSDA0239000	SCR-W3 / 16S
BTSDA0240000	SCR-W5 / 16
BTSDA0241000	SCR-WEX3
BTSDA0242000	SCR-WEX4
BTSDA0243000	SCR-XEM2.5
BTSDA0244000	SCR-XEM4

Wrench
扳手

Code NO. 型號	TYPE 規格
BTSTD0001000	T6
BTSTD0003000	T8
BTSTD0004000	T10
BTSTD0005000	T15
BTSTD0006000	T20
BTSTD0007000	T30
BTSTD0008000	WRN-M3L
BTSTD0009000	WRN-M4L
BTSTD0010000	WRN-M4T
BTSTD0011000	WRN-M5L
BTSTD0012000	WRE-M5L

Milling Cutter Inserts

Metric Series ISO 1832-1991

S	E	A	N	12	03	AF	T	N	-	M16
1	2	3	4	5	6	7	8	9		10

1 Shape

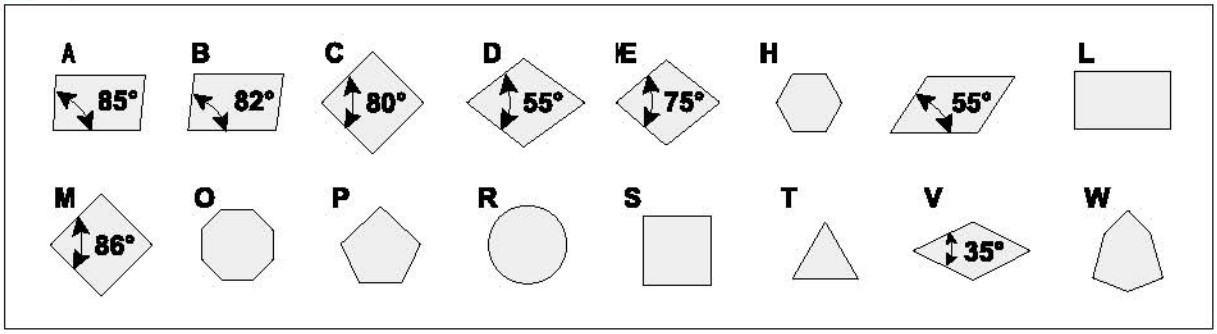

2 Clearance angle

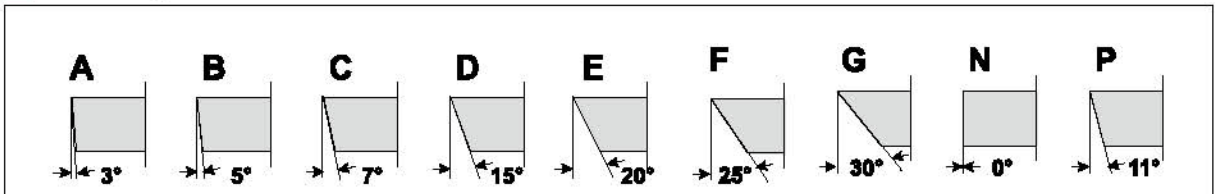

O Other clearance angles (description necessary)

3 MC Mechanical Power Vise

Tol class	Tolerance ± mm			Ford, dimension mm					
	m	s	d	6.53	9.525	12.7	15.875	19.05	25.4
A	0.005	0.025	0.025	•	•	•	•	•	•
E	0.025	0.025	0.025	•	•	•	•	•	•
F	0.005	0.025	0.013	•	•	•	•	•	•
G	0.025	0.130	0.025	•	•	•	•	•	•
H	0.013	0.025	0.013	•	•	•	•	•	•
J	0.005	0.025	0.050	•	•				
	0.005	0.025	0.080			•			
	0.005	0.025	0.100				•	•	
	0.005	0.025	0.130						•
K	0.013	0.025	0.050	•	•				
	0.013	0.025	0.080			•			
	0.013	0.025	0.100				•	•	
	0.013	0.025	0.130						•
M	0.080	0.130	0.050	•	•				
	0,130	0.130	0.080			•			
	0.150	0.130	0.100				•	•	
	0.180	0.130	0.130						•
U	0.13	0.130	0.080	•	•				
	0.200	0.130	0.130			•			
	0.270	0.130	0.180				•	•	
	0.380	0.130	0.250						•

4 Type of Insert

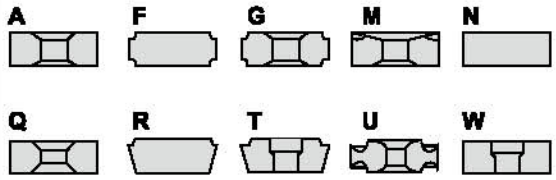

X Special design (description necessary)

5 Cutting edge length

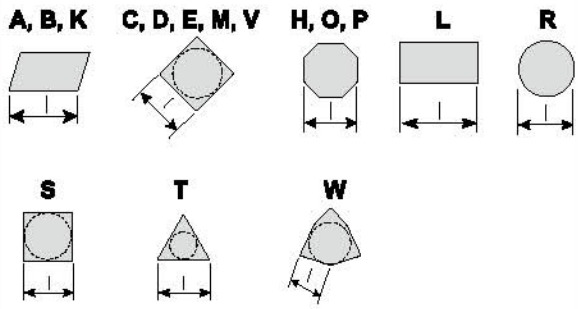

Comparison
Cutting edge lengh/I.C. (d)

IC (d)	shape					
	C	D	R,S	T	V	W
	Cutting edge length					
5.56					16	03
6.35	06	07	06	11		04
12.70	09	11	09	16		06
15.88	16	19	15	22		08
19.05	19	23	19	33		
25.40	25	31	25	44		

IC – Theoretical diameter of inscribed circle

6 Thickness

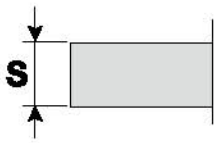

mm
01 – 1.59
T1 – 1.98
02 – 2.38
03 – 3.18
T3 – 3.97
04 – 4.76

mm
05 – 5.56
06 – 6.35
07 – 7.94
08 – 8.00
09 – 9.52

7 Insert with Wiper Edge/Radius

1st digit

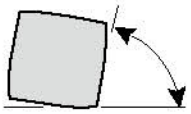

A – 45°
D – 60°
E – 75°
F – 85°
P – 90°

Z – Special

2nd digit

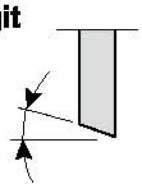

A – 3°
D – 5°
E – 7°
F – 15°
P – 20°

F – 25°
G – 30°
N – 0°
P – 11°

Z – Special

Radius mm

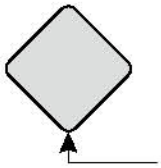

M0* – Round Inserts
00 – Sharp
01 – 0.1
02 – 0.2
04 – 0.4
08 – 0.8
12 – 1.2
etc. – *Metric Sizes

8 Cutting Edge Condition

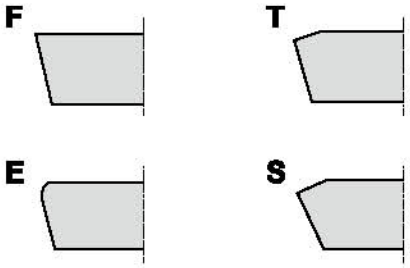

Non-obligatory information

9 Direction of Cutting

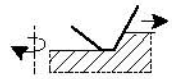

R

Right-rotated

L

Left-rotated

N

Neutral

R-and L-rotated

Slotting & Grooving Empire
切槽王國

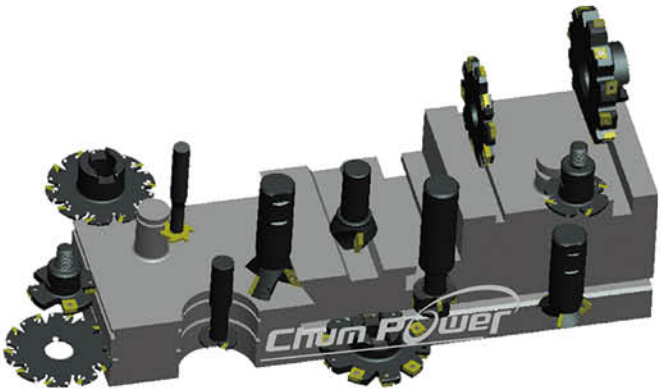

TS T-slot milling cutters
T型銑刀

SBL T-slot milling cutters
T型銑刀

STL T-slot milling cutters
T型銑刀

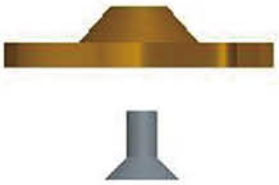

組合示意圖
Schematic Diagram

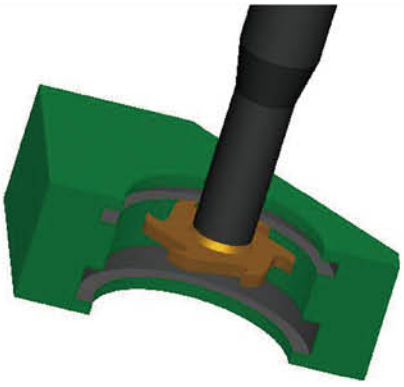

模擬圖
Analog Picture

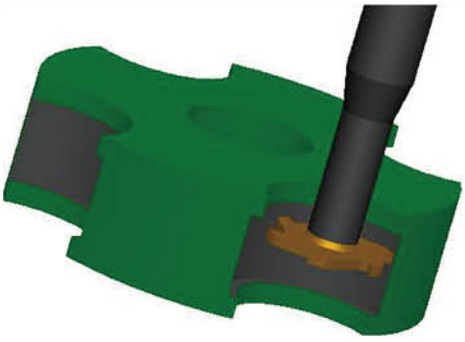

模擬圖
Analog Picture

Technical Data

技術資料

Z

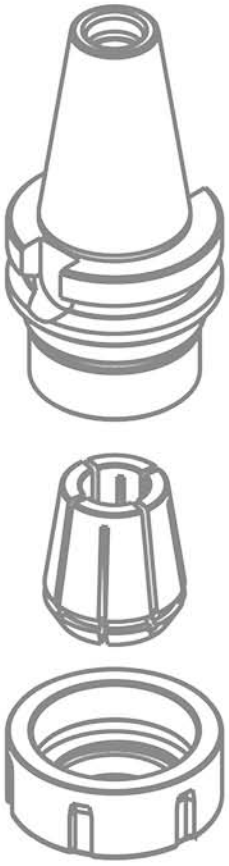

EX-POWER® Standard Inspection Table

EX-POWER® 標準檢驗表

■ Feature / 特點

EX-POWER® Universal Chucks guarantee maximum performance, reliability, and long lifetime of tool.

- Run Out tested certified to 0.05mm T.I.R. or 0.02mm or even better.
- Max torque can be up to 600 Kgf-cm.
- The rotation speed can be up to 8000 R.P.M.

■ EX-POWER® 泛用型夾頭保證可達刀具的最大性能、客戶使用之可信賴性、和長期使用壽命。

- 精度經測試，可達 0.05mm(T.I.R.) 或 0.02mm，甚至更高。
- 最大扭力值可達 600 Kgf-cm。
- 轉速可達 8000 R.P.M.。

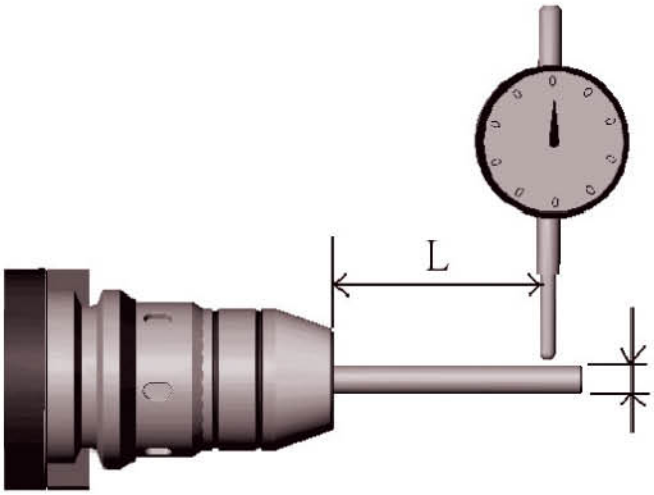

CODE NO.			
	ØD mm	L mm	Max RUN-OUT mm
STANDARD	6	55	0.05
	8		
	10		
	13	80	0.05
	16		

Dynamic Balance Standard Formula List
動平衡標準公式列表

SETTING OF THE BALANCE SERIES IS ACCORDING TO ISO 1940 STANDARD

THE FORMULA AS FOLLOWS :

- $U = MXe$
- $U = \frac{GxM}{n} x9549$
- $G = \frac{nxU}{9549xM}$

- G = UNBALANCE SERIES
- U = UNBALANCE(g-mm)
- e = ECCENTRIC DISTANCE(mm)
- M= ROTER WEIGHT(kg)
- n = rpm
- 9549= CONSTANT

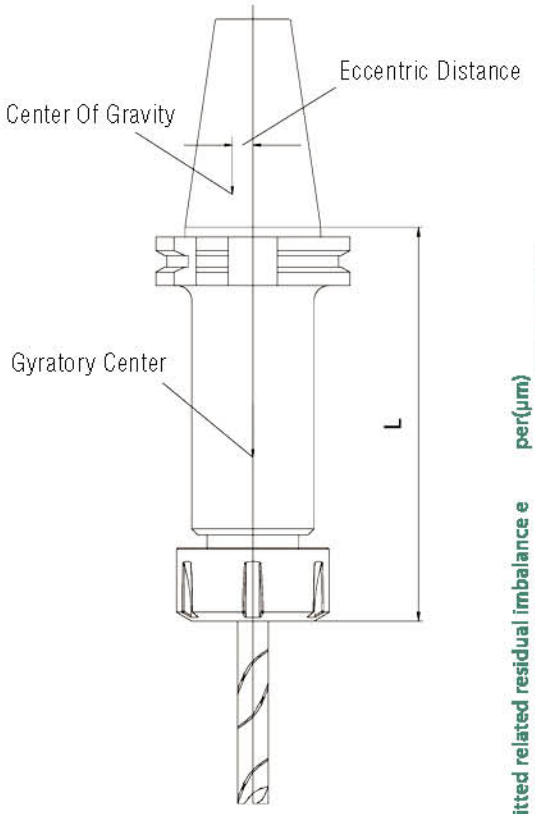

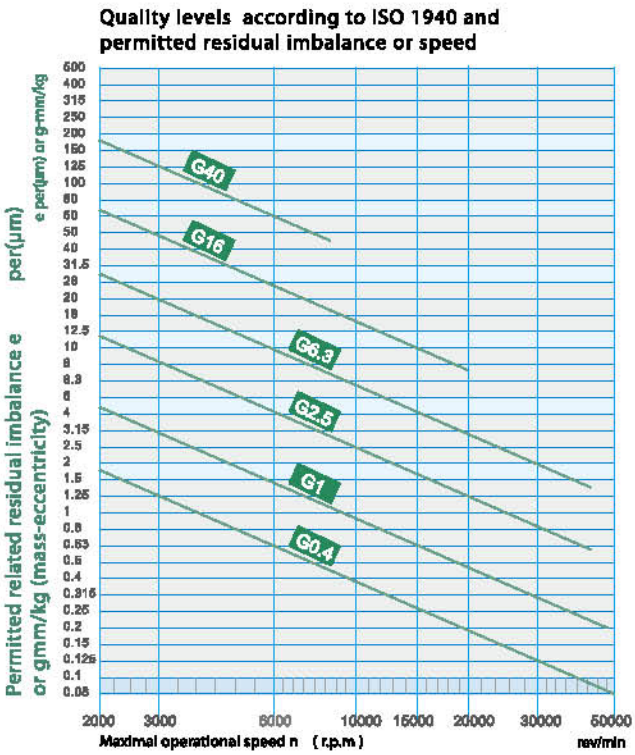

Balance Grade		G0.4	G1	G2.5	G6.3	G16	G40	G100	G250	G630	G1600	G4000
Precision Required	exw(mm/s)	0.4	1	2.5	6.3	16	40	100	250	630	1600	4000
	exw(μm*rpm)	3820	9549	23875	60165	152800	382000	954500	2387500	6016500	15280000	38200000

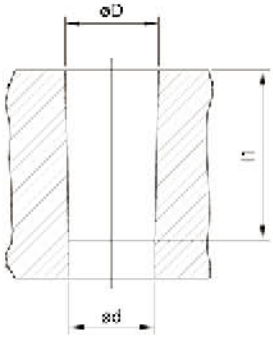

JACOBS TAPER

TYPE	D	d	l1
JT0	6.35	5.802	11.112
JT1	9.754	6.469	16.669
JT2S	13.94	12.386	19.05
JT2	14.199	12.386	22.225
JT33	15.85	14.237	25.4
JT6	17.17	15.852	25.4
JT3	20.599	18.951	30.956
JT4	28.55	26.346	42.069
JT5	35.89	33.422	47.625

DIN238

TYPE	D	d	l1
B6	6.35	5.85	10
B10	10.094	9.4	14.5
B12	12.065	11.1	18.5
B16S	15.608	14.5	21.5
B16	15.733	14.5	24
B18S	17.431	16.2	25
B18	17.78	16.2	32
B22	21.793	19.8	40.5
B24	23.825	21.3	50.5

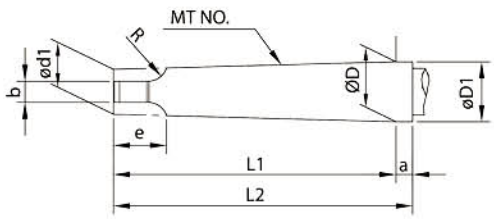

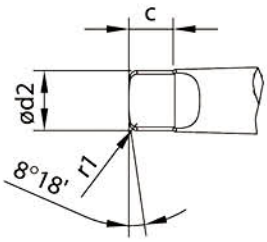

DIN228"A TANG TYPE"

TYPE	D	a	D1	d1	d2	L1	L2	b	c	e	R	r1
MT0	9.045	3	9.2	6.1	6	5.6	59.5	3.9	6.5	10.5	4	1
MT1	12.065	3.5	12.2	9	8.7	62	65.5	5.2	8.5	13.5	5	1.2
MT2	17.78	5	18	14	13.5	75	80	6.3	10	16	6	1.6
MT3	23.825	5	24.1	19.1	18.5	94	99	7.9	13	20	7	2
MT4	31.267	6.5	31.6	25.2	24.5	117.5	124	11.9	16	24	8	2.5
MT5	44.399	6.5	44.7	36.5	35.7	149.5	156	15.9	19	29	10	3
MT6	63.348	8	63.8	52.4	51	210	218	19	27	40	13	4

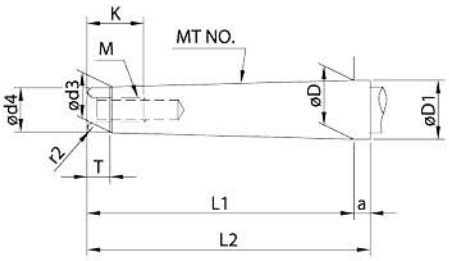

DIN228 "B DRAW BAR TYPE"

TYPE	D	a	D1	d3	d4	L1	L2	T	r2	M	K	r
MT0	9.045	3	9.2	6.4	6	50	53	4	0.2	---	---	1
MT1	12.065	3.5	12.2	9.4	9	53.5	57	5	0.2	M6	16	1.2
MT2	17.78	5	18	14.6	14	64	69	5	0.2	M10	24	1.6
MT3	23.825	5	24.1	19.8	19	81	86	7	0.6	M12	28	2
MT4	31.267	6.5	31.6	25.9	25	102.5	109	9	1	M16	32	2.5
MT5	44.399	6.5	44.7	37.6	35.7	129.5	136	10	2.5	M20	40	3
MT6	63.348	8	63.6	53.9	51	182	190	16	4	M24	50	4

TECHNICAL DATA 技術資料

JIS B 6339

· If it is suitable for center coolant standard, it can be ordered.

· The shank has pre-balance at G6.3, and can provide precision balance at G2.5, made by request.

· Shank body standard: JIS MAS 403.

· Taper tolerance < AT3.

· Basic Material: JIS-SCM415.

· Hardness > HRC 56° Carbon depth > 0.8mm.

· Roundness < 0.8μm.

· Surface roughness: Ra < 0.5μm.

· 如適合於中心止水標準，可選配。

· 柄徑出廠前動平衡值為 G6.3，依客戶需求亦可提供 G2.5 之柄徑。

· 柄徑標準：JIS MAS 403

· 錐度公差小於 AT3

· 基本材質：JIS-SCM415

· 硬度大於 HRC 56 滲碳深度大於 0.8mm

· 真圓度小於 0.8μm

· 表面粗糙：Ra 小於 0.5μm

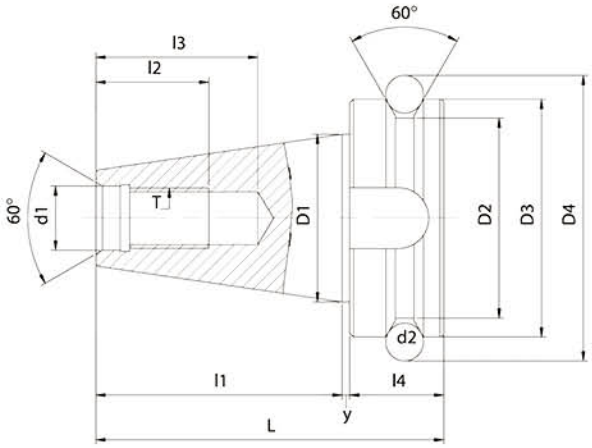

MAS BT SHANK SPECIFICATION / Taper degree's precision is AT3.

MOUNT TYPE	D3 h8	D1	D4	D2	d1 H8	d2	L	l1 ±0.2	l2 min.	l3 min.	l4	y ±0.4	T 6H
BT30	46	31.75	56.14	38	12.5	8	70.4	48.4	34	24	20	2	M12×1.75P
BT40	63	44.45	75.679	53	17	10	92.4	65.4	43	30	25	2	M16×2.0P
BT50	100	69.85	119.02	85	25	15	139.8	101.8	62	45	35	3	M24×3.0P

TECHNICAL DATA 技術資料

DIN 2080

- Shank body standard: DIN 2080.
- Taper tolerance < AT3.
- Basic Material: JIS-SCM415.
- Hardness > HRC 56° Carbon depth > 0.8mm.
- Soundness < 0.8μm.
- Surface roughness: Ra < 0.5μm.

- 柄徑標準：DIN-2080
- 錐度公差小於 AT3
- 基本材質：JIS-SCM415
- 硬度大於 HRC 56° 滲碳深度大於 0.8mm
- 真圓度小於 0.8μm
- 表面粗糙度：Ra 小於 0.5μm

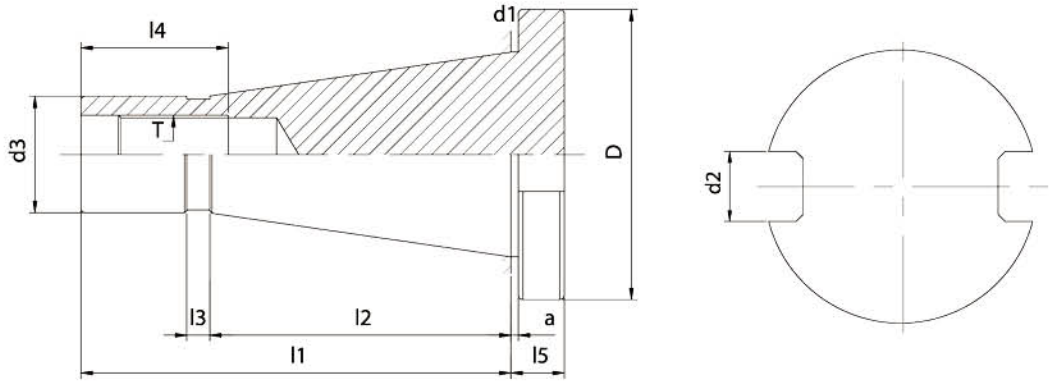

MAS BT SHANK SPECIFICATION / Taper degree's precision is AT3.

MOUNT TYPE	D 0 0.4	d1	d2 H12	d3 max.	a ±0.5	l1	l2	l3	l4 min.	l5 0.15	T
NT30	50	31.75	16.1	17.11	1.6	68.4	48.4	3	24	8	1/2"-12W, M12×1.75P, 1/2"-13UNC
NT40	63	44.45	16.1	25.66	1.6	93.4	65.4	5	32	10	5/8"-11W, M16×2.0P
NT50	97.5	69.85	25.7	39.29	3.2	126.8	101 .8	8	47	12	1"-8W, M24×3.0P

TECHNICAL DATA 技術資料

DIN 69871

- If it is suitable for center coolant standard (DIN-69871-AD or B), it can be ordered.
- The shank has pre-balance at G6.3, and can provide precision balance at G2.5, made by request.
- Shank body standard: DIN 69871.
- Taper tolerance < AT3.
- Basic Material: JIS-SCM415.
- Hardness > HRC 56° Carbon depth > 0.8mm.
- Soundness < 0.8μm.
- Surface roughness: Ra < 0.5μm.

- 如適合於中心止水標準 (DIN-69871-AD or B) ，可選配。
- 柄徑出廠前動平衡值為 G6.3，依客戶需求亦可提供 G2.5 之柄徑。
- 柄徑標準：DIN-69871
- 錐度公差小於 AT3
- 基本材質：JIS-SCM415
- 硬度大於 HRC 56° 滲碳深度大於 0.8mm
- 真圓度小於 0.8μm
- 表面粗糙度：Ra 小於 0.5μm

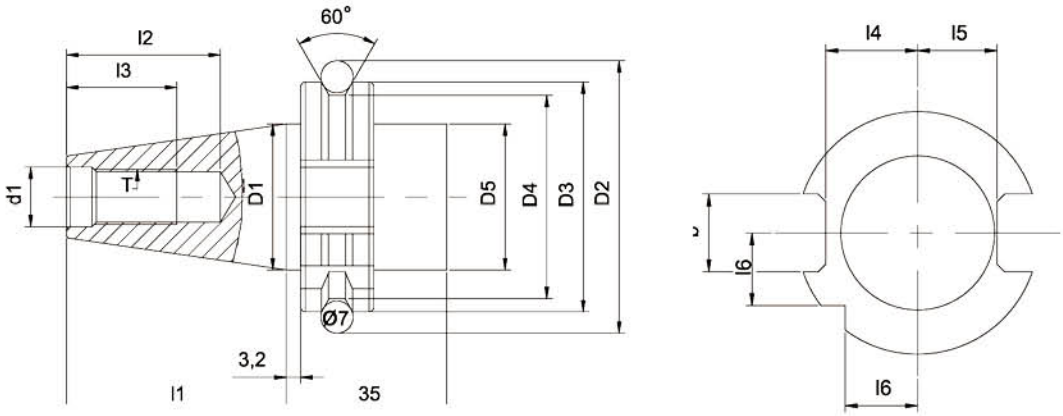

MOUNT TYPE	D3 0 0.1	D1	D2 ±0.05	D4 0 0.5	D5 max.	d1 H7	b H12	l1 0 0.3	l2 min.	l3 min.	l4 0 0.4	l5 0 0.4	l6 0 0.3	T
SK30	50	31.75	59.30	44.30	45	13	16.1	47.8	33.5	24	19	16.4	15	M12×1.75P
SK40	63.55	44.45	72.30	56.25	50	17	16.1	68.4	42.5	32	25	22.8	18.5	M16×2.0P
SK50	97.50	69.85	107.25	91.25	80	25	25.7	101.75	61.5	47	37.7	35.5	30	M24×3.0P

TECHNICAL DATA 技術資料

DIN 69893 A+C

- The shank is pre-balance at G6.3, and can provide precision balance at G2.5, made by request.
- Shank body standard: DIN69893
- Taper tolerance < AT3.
- Basic Material: JIS-SCM415.
- Hardness > HRC 56° Carbon depth > 0.8mm.
- Roundness < 0.8μm.
- Surface roughness: Ra < 0.5μm.

- 柄徑出廠前動平衡值為 G6.3，依客戶需求亦可提供 G2.5 之柄徑。
- 柄徑標準：DIN-69893
- 錐度公差小於 AT3
- 基本材質：JIS-SCM415
- 硬度大於 HRC 56° 滲碳深度大於 0.8mm
- 真圓度小於 0.8μm
- 表面粗糙度：Ra 小於 0.5μm

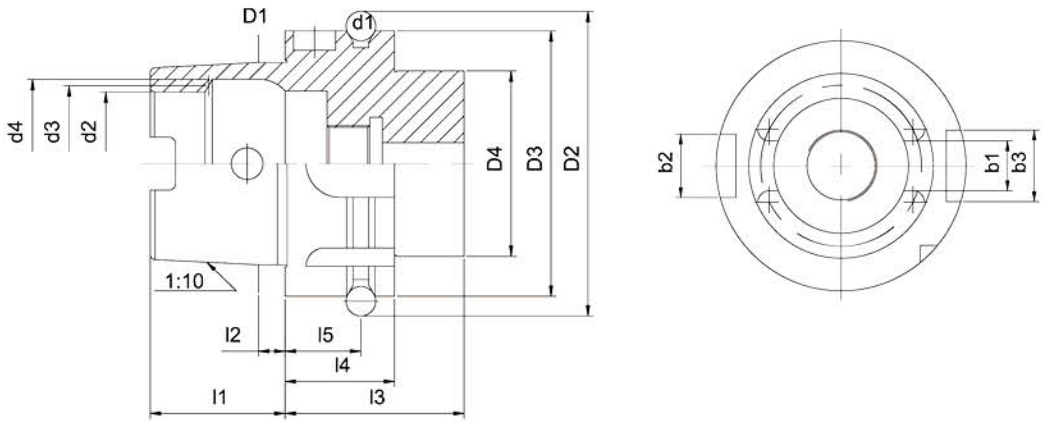

Type-A

MOUNT TYPE	D3 h10	D1	d2 H10	d4 H11	d3	D4 max.	D2 0 0.1	d1	l1 0 0.2	l2	l3 min.	l4 0 0.1	l5 ±0.1	b1 ±0.04	b2 H10	b3 H10
HSK32	32	24.007	17	21	19	26	37	4	16	3.2	35	20	16	7.05	7	9
HSK40	40	30.007	21	25.5	23	34	45	4	20	4	35	20	16	8.05	9	11
HSK50	50	38.009	26	32	29	42	59.3	7	25	5	42	26	18	10.54	12	14
HSK63	63	48.01	34	40	37	53	72.3	7	32	6.3	42	26	18	12.54	16	18
HSK100	100	75.013	53	63	58	85	109.75	7	50	10	45	29	20	20.02	20	22

TECHNICAL DATA 技術資料

ASME B5.50

- If it is suitable for center coolant standard (DIN-69871-AD or B), it can be ordered.
- The shank has pre-balance at G6.3, and can provide precision balance at G2.5, made by request.
- Shank body standard: ANSI B5.50.
- Taper tolerance < AT3.
- Basic Material: JIS-SCM415.
- Hardness > HRC 56° Carbon depth > 0.8mm.
- Soundness < 0.8μm.
- Surface roughness: Ra < 0.5μm.

- 如適合於中心止水標準 (DIN-69871-AD or B)，可選配。
- 柄徑出廠前動平衡值為 G6.3，依客戶需求亦可提供 G2.5 之柄徑。
- 柄徑標準：ANSI B5.50.
- 錐度公差小於 AT3
- 基本材質：JIS-SCM415
- 硬度大於 HRC 56° 滲碳深度大於 0.8mm
- 真圓度小於 0.8μm
- 表面粗糙度：Ra 小於 0.5μm

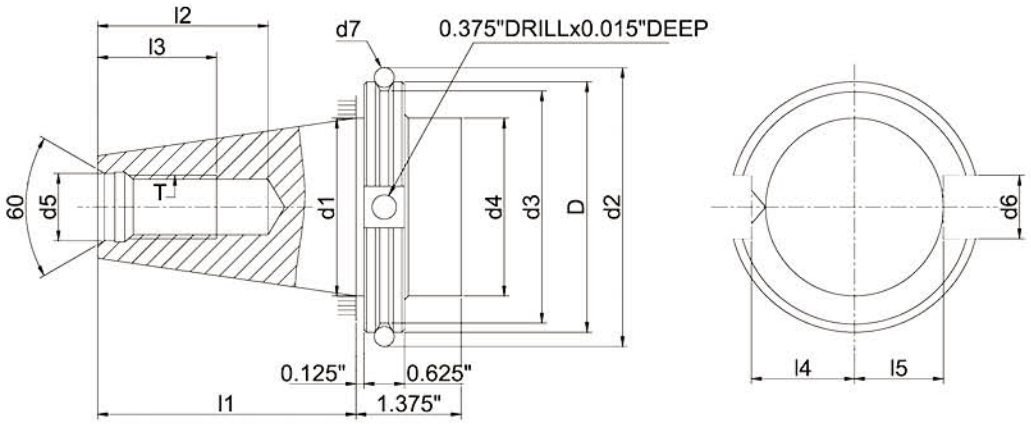

MOUNT TYPE	D ±0.002	d1	D2 ±0.002	d3 ±0.01	d4 min.	d5 ±0.015 0	d6 ±0.001	d7	l1 ±0.005	l2 min.	l3 ±0.01	l4 0 0.015	l5 0.01	T UNC 28
CAT30	1.812	1.250	2.176	1.531	1.250	0.516	0.645	0.2813	1.875	1.00	0.188	0.735	0.640	0.500-13
CAT40	2.500	1.750	2.863	2.219	1.750	0.641	0.645	0.2813	2.687	1.12	0.188	0.985	0.890	0.625-11
CAT45	3.250	2.250	3.613	2.969	2.250	0.766	0.770	0.2813	3.250	1.50	0.188	1.235	1.140	0.750-10
CAT50	3.875	2.750	4.238	3.594	2.750	1.031	1.020	0.2813	4.000	1.75	0.250	1.485	1.390	1.000-8

MOUNTING INSTRUCTION FOR ER-COLLETS PER DIN STD 6499-B

Assembling Collet 組裝筒夾 / Removing Collet 移除筒夾

■ Assembling Collet

Insert groove of the collet into eccentric ring of the clamping nut the mark on the bottom of the nut. Push collet in the direction of the arrow until it clicks in Insert tool. Screw nut with collet onto tool holder.

Assembling Collet
組裝筒夾

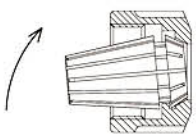

■ 組裝筒夾

組裝筒夾將筒夾外緣的溝槽，依螺姆底部的標示放入螺姆內。依箭頭指示將筒夾推入螺姆，直至發出喀搭一聲後，將筒夾及螺姆鎖至刀桿上。

■ Removing Collet

After the nut is unscrewed from the tool holder, press on the face of the collet while simultaneously pushing sideways on the back of the collet until it disengages from the clamping nut.

Removing Collet
移除筒夾

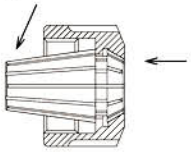

■ 移除筒夾

將螺姆從刀桿上鬆開取下後，依箭頭指示輕推筒夾正面，同時從筒夾背部的側面輕推直至筒夾與螺姆分離。

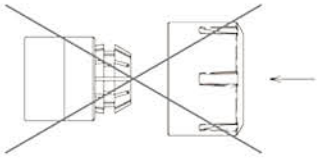

■ Improper assembly can permanent destroy the concentricity of the collet and may result in a damaged clamping nut.

■ 不適當的組裝方式，長期可能導致筒夾同心度偏離並造成螺姆毀損。

NOTE

■ Only mount nuts with correctly inserted collets!Never place the collet into the holder without first assembling it into the nut.

■ Never clamp oversize tool shafts!

e.g. never use a Ø12-11mm collet to clamp a Ø12.2mm shaft. Rather use the next bigger collet (here Ø12.5-11.5mm or Ø13-12mm collet).

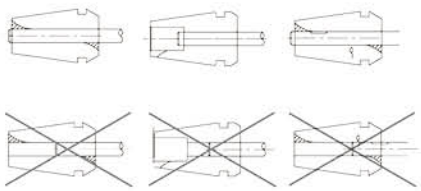

■ Insert tool the full length of the collet for best results if possible. However never insert tool less than 2/3 of the collet bore length. Improper tool insertion can permanently deform the collet and will result in poor runout.

注意

■ 組裝時務必使用正確的筒夾。筒夾需先與螺姆組合後再放入刀桿。

■ 請勿使用尺寸過大之刀具。

(請勿將 12.2mm 的刀具裝在 12 -11mm 筒夾，應該使用更大尺寸的筒夾如 12.5-11.5mm 或 13-12mm 的筒夾)

■ 盡可能的將刀具依筒夾口徑之長度置入筒夾內。刀具置入筒夾內不可少於筒夾口徑長度之 2/3 。不適當之組裝方式長期可能倒致筒夾變形或並且影響精度。

MOUNTING INSTRUCTION FOR ER-COLLETS PER DIN STD 6499-B

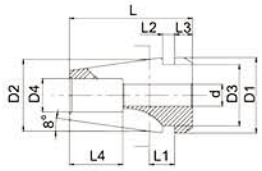

1

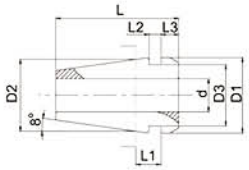

2

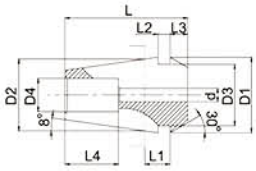

3

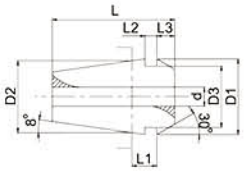

4

Size	d (mm)	D1 (mm)	D2 (mm)	D3 (mm)	D4 (mm)	L (mm)	L1 (mm)	L2 (mm)	L3 (mm)	L4 (mm)	Drawing
ER 8	0.5...2.5	8.5	8.0	6.5	4.0	13.5	2.98	1.2	1.5	6.0	1
ER 8	3.0 ...5.0	8.5	8.0	6.5	-	13.5	2.98	1.2	1.5	-	2
ER 11	0.5...2.5	11.5	11.0	9.5	5.0	18.0	3.80	2.0	2.5	9.0	3
ER 11	3.0...7.0	11.5	11.0	9.5	-	18.0	3.80	2.0	2.5	-	4
ER 16	0.5...4.5	17.0	16.0	13.8	7.5	27.5	6.26	2.7	4.0	10.0	3
ER 16	5.0...10.0	17.0	16.0	13.8		27.5	6.26	2.7	4.0	-	4
ER 20	0.5...6.5	21.0	20.0	17.4	9.0	31.5	6.36	2.8	4.8	13.0	3
ER 20	7.0...13	21.0	20.0	17.4	-	31.5	6.36	2.8	4.8	-	4
ER 25	0.5...7.5	26.0	25.0	22.0	12.0	34.0	6.66	3.1	5.0	15.0	3
ER 25	8.0...16.0	26.0	25.0	22.0	-	34.0	6.66	3.1	5.0	-	4
ER32	2.0...3.5	33.0	32.0	29.2	15.0	40.0	7.16	3.6	5.5	20.0	3
ER 32	4.0...7.5	33.0	32.0	29.2	15.0	40.0	7.16	3.6	5.5	15.0	3
ER 32	8.0...20.0	33.0	32.0	29.2	-	40.0	7.16	3.6	5.5		4
ER 40	2.0...3.5	41.0	40.0	36.2	20.0	46.0	7.66	4.1	7.0	21.8	3
ER 40	4.0...8.5	41.0	40.0	36.2	20.0	46.0	7.66	4.1	7.0	18.0	3
ER 40	9.0...30.0	41.0	40.0	36.2	-	46.0	7.66	4.1	7.0	-	4
ER 50	4.0...10.0	52.0	50.0	46.0	20.0	60.0	12.60	5.5	8.5	32.0	3
ER 50	12.0...34.0	52.0	50.0	46.0	-	60.0	12.60	5.5	8.5	-	4

All ER collet per DIN STD 6499 B have a clamping rangel

Keyless Drill Chuck Manual 自動鑽夾頭操作須知

CP690622

pic.1 Integral universal chucks

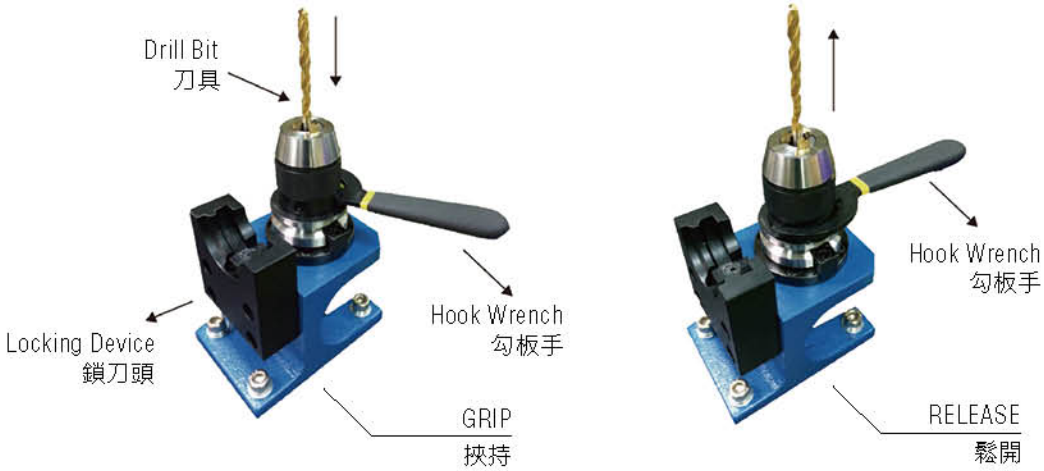

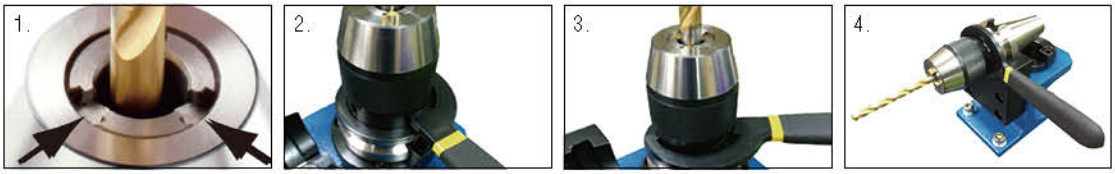

CLOCKWISE(CW) 正轉 counter-clockwise(CCW) 反轉

pic.2

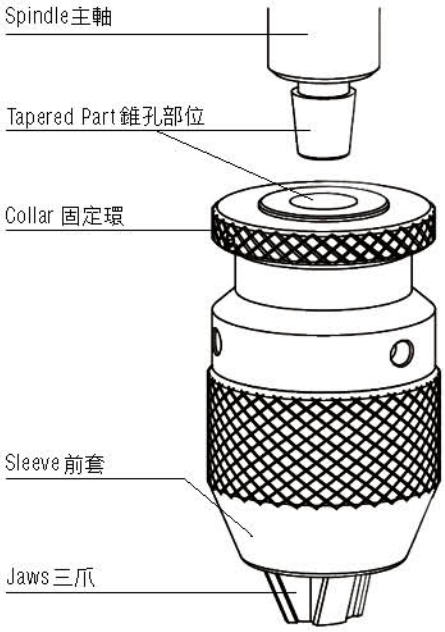

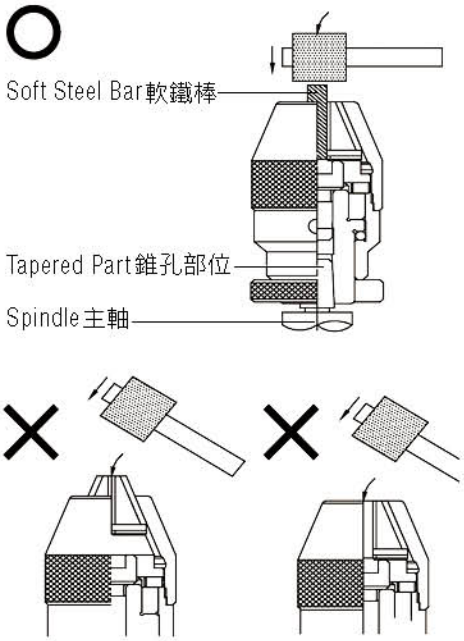

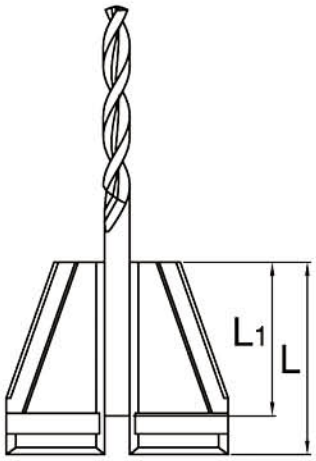

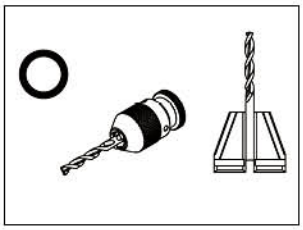

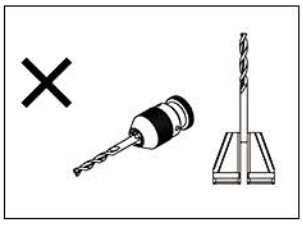

ATTENTION

Easy to operate, Convenience and the Higher Safety" are the great advantage of this kind of Drill Chuck. When operating this product, you have to read the MANUAL carefully to keep from causing the accident and promote longevity. Please follow the point as below：When you operate, the lenght of holding capacity(L1)shall insert the drill bit to the bottom or at least insert to 2/3 of the length of three Jaws(L)

Every kinds of specification (Drill Chuck) for the lenght of three jaws(L)& the holding capacity(L1)is as follows. Please refer to it.

注意事項

本產品最大優點是簡單容易操作、快速方便、安全性極高，當使用本產品時，為了減少意外事故發生，延長產品壽命，必需詳細閱讀操作說明書，並遵守下列舉的基本事項：夾持長度 (L) 應將鑽頭柄插入到底或至少爪長 (L) 的 2/3。

Spec. of Drill Chuck	Length of Three Jaw L(mm)	Holding Capacity L1(mm)
5/8" (16mm)	30	20
1/2" (13mm)	28	19
3/8" (10mm)	26	17
1/4" (6.5mm)	20	13
1/8" (3mm)	14	9
5/16" (8mm)	26	17

CAUTION

Mount the chuck firmly and correctly according to "How to mount" in this manual.

- Check and confirm that the tool is clamped firmly by the three jaws before starting operating.
- Use appropriate tool for chuck only.
- The chuck cannot be used in CCW rotation.
- Do not touch the chuck or the tool while being rotated.
- Do not use the chuck if in some abnormal conditions, like cracks, breakage or transformation.
- Do not make any repairing, re-assembling or remodeling on the chuck.

If don't follow the directions above, may cause serious bodily injuries or accidents.

How to mount

1. The tapered part and arbor must well be cleaned off of oily materials, dust and foreign materials.
2. The three jaws must be retracted below the level of the chuck nose.
3. Drive the chuck by hammering the edge of the soft steel bar with a wooden hammer while inserting the tapered part of spindle or the arbor into the tapered part of the chuck.
4. Put tool among three jaws into 2/3 deep or bottom of forehead in chuck and mount firmly with wrench.

* Must use locking device and wrench while mounting chuck(pic. 1)

* Do not hammer the jaws or sleeve, it may cause inaccuracy of run out or breakage of sleeve.(pic. 2)

安裝注意事項

請根據在本手冊中的"安裝注意事項"，牢固並且正確的進行安裝動作。

- 依據此說明書中"夾頭裝置固定及刀具鎖固"步驟，即可正確地裝置此夾頭及刀具。
- 開始操作前，檢查並確認自動鑽夾頭是否確實夾持住所使用刀具。
- 請使用適當的自動鑽夾頭夾持所使用的刀具。
- 此夾頭於加工時，只可正轉，不可逆轉；若逆轉操作將失去功能。
- 勿觸碰正在轉動中或未停止前之夾頭或刀具。
- 出現某些異常狀況下，如：夾頭破裂、損壞或變形，請勿再使用此夾頭。
- 切勿作任何修復、重組甚至重新改造此產品之動作。

如未注意以上事項，可能造成使用者發生嚴重受傷及意外。

夾頭裝置固定及刀具鎖固"步驟

1. 夾頭錐度或夾頭柄和主軸錐部皆須使用防鏽油清除乾淨。
2. 三爪必須退回至夾頭鼻端的水平線之下。
3. 將主軸或夾頭柄錐部嵌入夾頭之錐部時，再用木槌捶擊軟鐵棒將夾頭擊入。
4. 將所需使用之刀具置入夾頭中，請務必將刀具插入三爪底端或2/3 以上深度，並使用勾扳手確實鎖緊刀具，使夾頭能有效夾持住刀具。

* 此夾頭如有裝接刀把使用，請務必在鎖刀座上使用勾扳手鎖緊刀具再使用。(圖片一)

* 勿直接捶打三爪或前套，否則有可能會造成產品精度不良或外殼破裂損壞。(圖片二)

Ex-Power Chuck Manual EX-Power刀把裝配須知

CP690622

Integral universal chucks

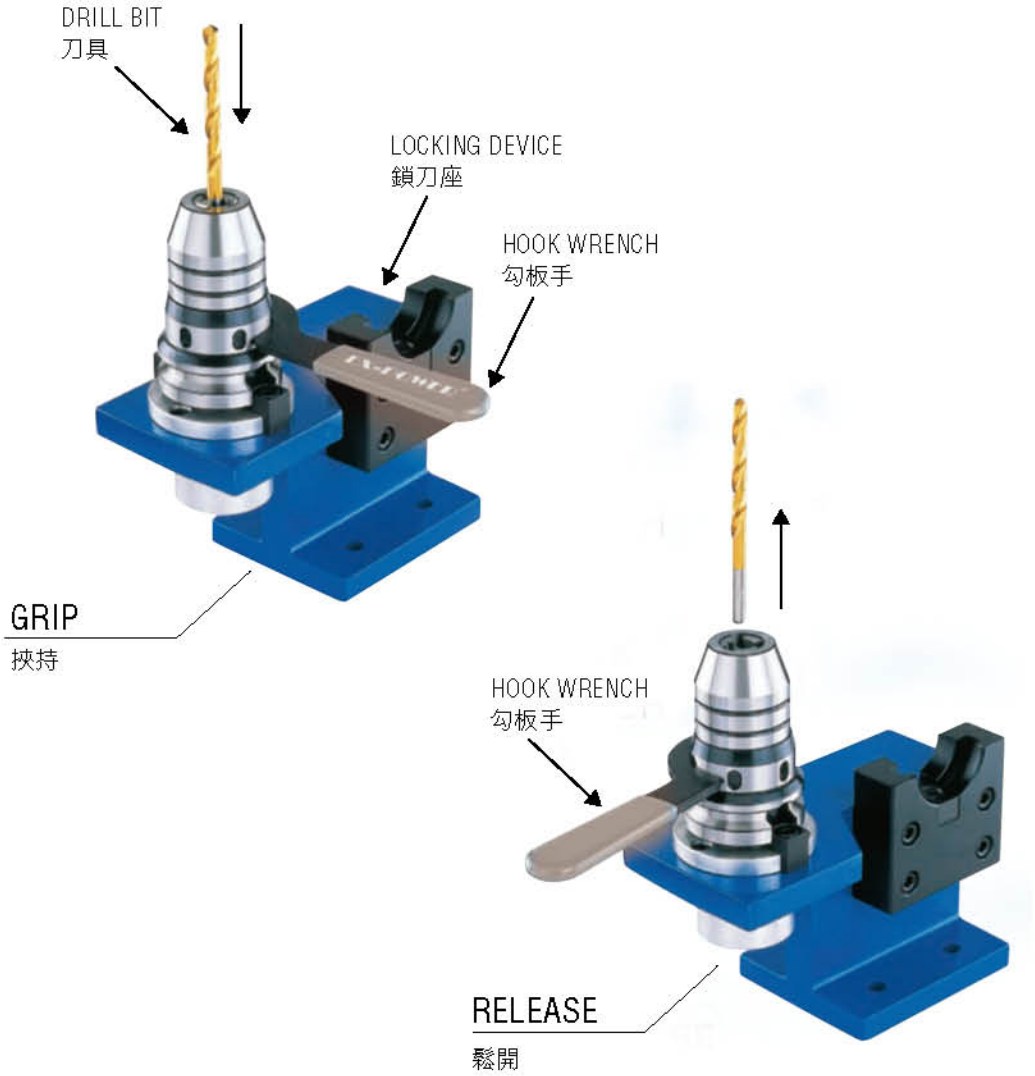

Clockwise(CW)
正轉

Counter-Clockwise(CCW)
反轉

- Mount EX-POWER Chuck firmly according to "HOW TO MOUNT" in this manual. Otherwise, the EX-POWER Chuck might be loosened which may eventually result in serious bodily injuries or accidents for user.
- Check and confirm the drill bit is clamped firmly by the chuck before starting operation. Improper clamping of the drill bits will cause its abnormal runout, breakage or detaching of the chuck, which may result in serious injuries or accidents for user.
- Please use the proper EX-POWER Chuck to clamp the drill bits to avoid its abnormal runout and bits dropping off. which may result in serious injuries or accidents for user.
- DO NOT change the tool on the spindle to avoid causing serious accidents and injuries for user due to turning idly in the spindle itself. When idling, please turn power off or press Emergency Stop Button.
- DO NOT touch the tool or EX-POWER Chuck when rotating. Otherwise, user might be hauled by the rotating machine, which may result in serious injuries or accidents
- DO NOT manipulate EX-POWER Chuck before the spindle stops totally. Otherwise, user might be hauled by the rotating machine, which may result in serious injuries or accidents.
- DO NOT use EX-POWER Chuck anymore if some abnormal conditions, "like cracks, breakage or transformation are detected thereon. Otherwise, it may result in serious injuries or accidents for user
- DO NOT make any repairing, re-assembling nor remodeling on EX-POWER Chuck. Otherwise, it' ll cause the weak function or abnormal runout of the chuck.
- Please operate EX-POWER Chuck under normal and clean usage.
- Please wipe iron filings away before and after operating EX-POWER Chuck. Also, it's necessary to do anti-corrosion treatment to ensure the longevity of this chuck.

HOW TO MOUNT:

1. Accordingly, put EX-POWER Chuck into the locking device
2. To rotate the ring to adjust the open and close of three jaws.
3. Please put the drill bit into EX-Power Chuck.
4. Please use the attached hook wrench to rotate the ring to let the drill bit be clamped firmly by the jaws.
5. For safety, please insert the drill bit into the bottom of jaws or the depth of 2/3..
6. Please operate EX-Power Chuck on the spindle after tightening the bit. If not, the bit drops off and may result in serious injuries or accidents. (The operation of changing the bit directly on Universal machine shall not be limited on this instruction. Please follow above steps 1-5.)

- 依據此手冊中教導”裝置及固定”之步驟，正確完成裝置此EX-POWER鑽夾頭。否則此刀把鬆脫可能造成使用者嚴重的意外傷害。
- 開始操作前，請檢查並確認EX-POWER鑽夾頭是否確實地夾持住您所使用的鑽尾。錯誤的夾持可能產生精度差異、刀把破損或解體，進而造成使用者嚴重的意外傷害。
- 請使用適當的EX-POWER鑽夾頭夾持您所使用的鑽尾，以避免精度偏差及因刀具脫落而造成使用者嚴重的意外傷害。
- 請勿在主軸上更換EX-POWER鑽夾頭上之刀具，以免因夾持力不足而造成使用者嚴重的意外傷害。(若為在泛用機器上的直接換刀操作，請避免主軸空轉。主軸錯誤回轉時，請切斷電源，或按下緊急停止鈕，停止運轉。)
- 請勿觸碰正在轉動中的EX-POWER鑽夾頭或刀具，否則可能會被正在運轉中的機器拖住，造成嚴重的意外傷害。
- 主軸還未完全停止前，請勿操作EX-POWER鑽夾頭；否則可能會被正在運轉中的機器拖住，造成嚴重的意外傷害。
- EX-POWER鑽夾頭及刀具出現外觀破裂、外型損壞或變形等等異常狀況時，請勿再繼續使用，否則可能造成嚴重的意外傷害。
- 切勿作任何修復、重組甚至重新改造此產品之動作。否則將造成產品機能衰減、精度不良，及引起嚴重的意外傷害。
- 請在刀把無污損的狀態下使用。
- 請於使用前、後拭淨沾粘的鐵屑，並作適當的防鏽處理，以確保EX-POWER鑽夾頭的壽命。

裝置固定步驟：

1. 將EX-POWER鑽夾頭置入鎖刀座內。(若為在泛用機器上直接換刀使用的情況下，請注意勿使主軸空轉或錯誤運轉。)
2. 旋轉驅動環，調整三爪開合。
3. 將所需使用之刀具置入EX-POWER鑽夾頭中。
4. 使用附屬勾扳手旋轉驅動環，使爪子夾持住刀具。
5. 為操作安全，請務必將刀具插入夾爪底端或2/3以上的深度。
6. 為防止刀具脫落而造成意外傷害，請確實鎖緊刀具後再裝上主軸使用。(泛用機器上的直接換刀操作不在此限，請參照步驟1-5。)

Tap Chuck Torque Adjustment Manual 絲攻扭力調整須知

CP690622

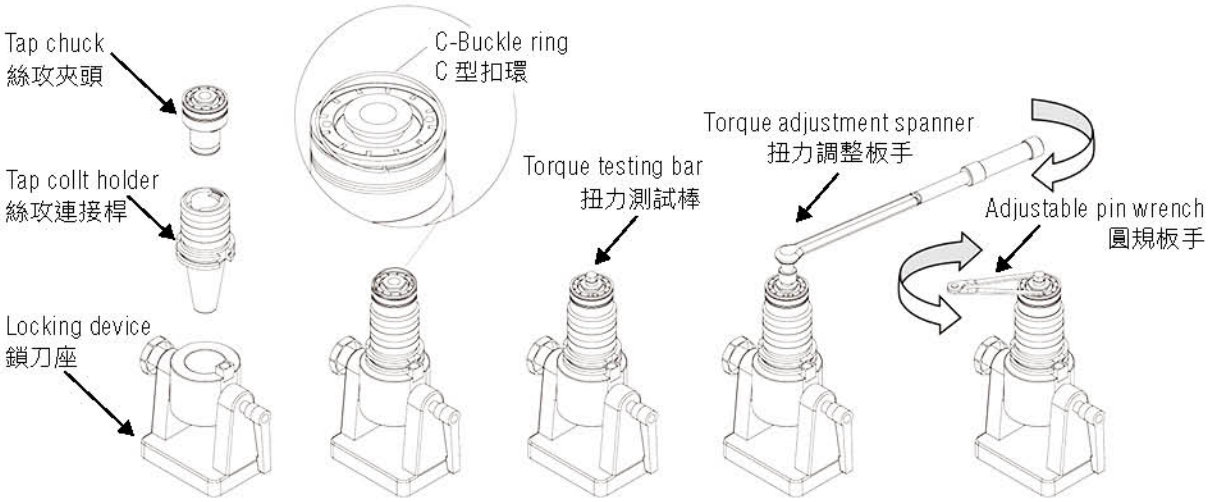

FIG.1 FIG.2 FIG.3 FIG.4 FIG.5

HOW TO MOUNT:

Step.1: Fix the Tap collet holder on locking device. Then put the tap chuck in position to make sure it can't turn around.(FIG.1)

Step2 : Please take C-buckle ring off when you test it.(FIG.2)

Step3 : Put torque testing bar into the tap chuck. The top/square shape of testing bar shall be completely locked in the tap chuck.(FIG.3)

Step4 : Then using torque testing bar and torque adjustment spanner pulling in clockwise direction to test the torque.(FIG.4)

Step5 : If the torque value is under standard, you can use adjustable pin wrench to adjust the nut. Turn adjustable pin wrench clockwise to rotate the nut downward and compress the spring. Hence, the torque value can be increased. Oppositely, if the torque value is over standard, you can operate in counter-clockwise to loose the spring.(FIG.5)

操作步驟：

步驟 1：利用鎖刀座固定絲攻連接桿，再將絲攻夾頭置入，使其無法轉動，如圖①所示。

步驟 2：測試時，先將 C 型扣環取下，如圖②所示。

步驟 3：將扭力測試棒置入絲攻夾頭內，使測棒前端之方型部份完全卡入，如圖③所示。

步驟 4：再配合扭力測試棒與扭力調整扳手，則順時針方向拉動扳手並測試扭力，如圖④所示。

步驟 5：若扭力值不足標準值，則利用圓規板手調整螺姆，以順時針方向轉動可使螺姆向下旋入，擠壓彈片，即 可增加扭力值，如圖⑤所示。
若扭力值超出標準範圍，則以逆時針轉動螺姆，使彈片放鬆。

Keyless Drill Chuck Manual Keyless Drill Chuck 修護裝配

CP690622

STEP.1

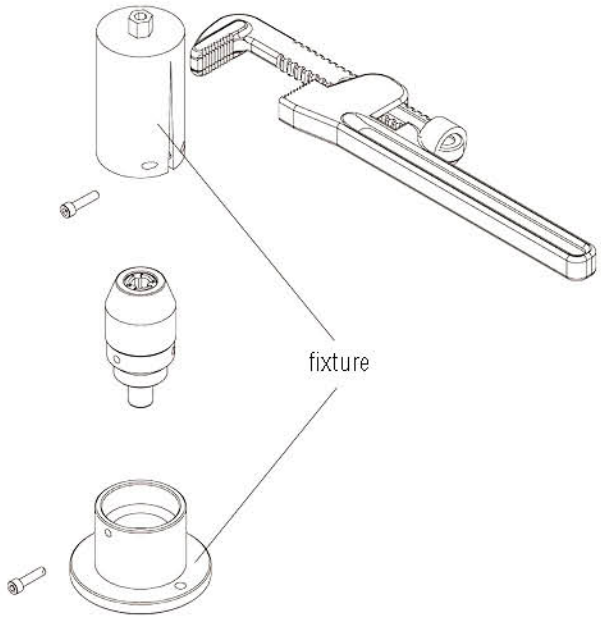

Step.1: Drill chuck to insert the fixture then lock screws.
步驟 1: 將夾頭置入治具內，利用螺絲鎖緊。

STEP.2

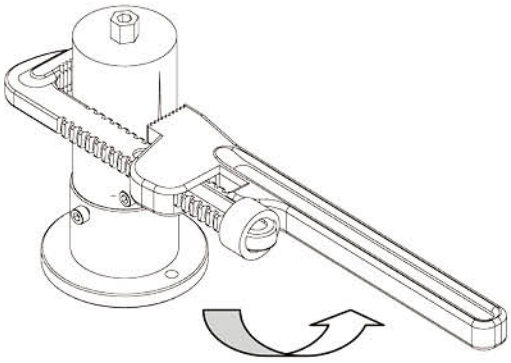

Step2 : Use plier to damp the fixture in order to loose sleeve.
步驟 2 : 利用治具夾緊前套並利用 T 型板手旋轉，使前套放鬆。

STEP.3

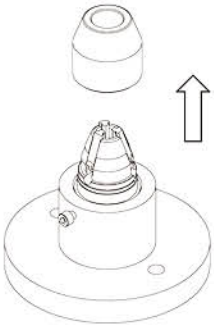

Step3 : After looseing, rotate sleeve out then replace Jaws.
步驟 3 : 放鬆前套後，即可替換爪子。

Tap Chuck Section Instruction 絲攻夾頭半剖圖說明書

CP690622

■ CAUTION:

1. Mount the tap chuck correctly according to "HOW TO MOUNT" in this manual. Otherwise, the tap chuck drops off, which results in serious accidents and injuries for user.
2. Confirm the tap collet holder is connected firmly with spindle before starting operation. Otherwise, it will lead to breakage of tap collet holder or spindle.
3. Do not touch the tap collet holder and tap when rotating. Otherwise, user may be hauled by the rotating machine, which results in serious accidents and injuries for user.
4. Please use the tap chuck with tap in the same dimension correctly. Otherwise, it will lead to breakage of tap, chuck.
5. The tap collet holder shall connect the spindle. Please match the correct tap collet holder. That is, to mount the tap chuck by different ways. Ex. BT toolholder can be put in the locking device for use.
6. Pay more attention on cleanness before/after operation. To avoid its abnormal run-out and to shorten its life-span, please use cloth and nozzle for cleaning.

1. 依據此手冊中教導「如何裝置及固定」之步驟，即可正確地完成裝置此夾頭；否則，此夾頭將鬆開，最後可能造成使用者嚴重地受傷及意外。
2. 開始操作前，檢查並確認連接桿是否確實的與機器之主軸緊密連結，否則將造成絲攻連接桿或主軸結構損壞。
3. 勿觸碰正在轉動中連接桿或刀具，否則會被正在運轉中的機器捲入，造成您嚴重地受傷及意外。
4. 請正確選用絲攻夾頭搭配同規格絲攻，否則會損壞絲攻夾頭。
5. 絲攻連接桿有連接各式主軸，請搭配使用不同刀把端，即使用不同方式置入絲攻夾頭，如：BT 端即可放置於鎖刀座內使用。
6. 連接桿使用前、後，都須注意清潔度，先使用布擦拭、再用噴嘴噴淨，避免影響精度及壽命。

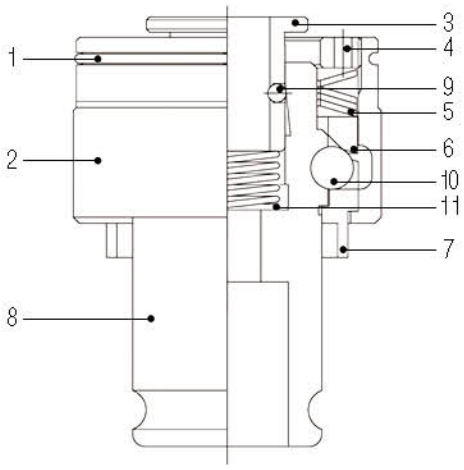

1. Retaining Ring C Type	1.C 型扣環
2. Cover	2. 外殼
3. Bushing	3. 襯套
4. Adjusting nut	4. 調整螺姆
5. Leaf spring	5. 彈片
6. Washer	6. 墊圈
7. Block	7. 固定塊
8. Body	8. 本體
9. Ball bearing (Small)	9. 小鋼珠
10. Ball bearing (Big)	10. 大鋼珠
11. Spring	11. 彈簧

STEP.1

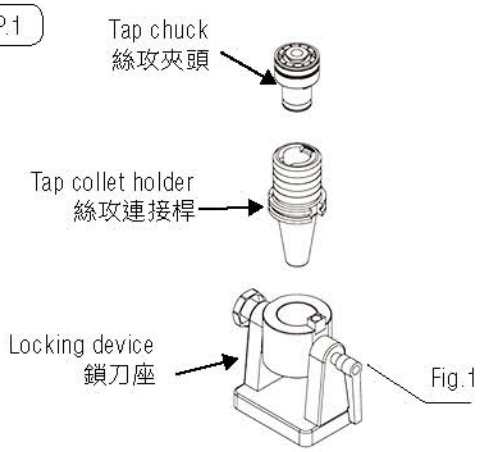

Fig.1

Step.1: Put the cover of tap collet holder afterwards and then put the tap chuck in.
步驟 1: 將絲攻連接桿外殼往後推，然後置入絲攻夾頭。

STEP.2

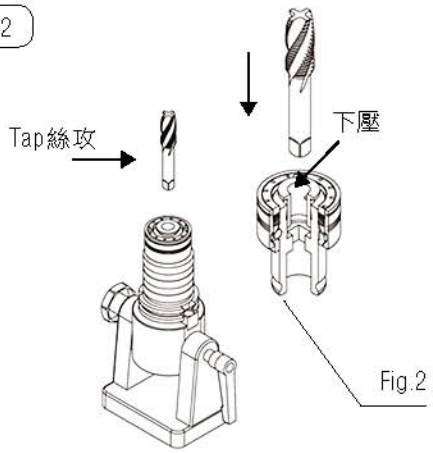

Fig.2

Step2 : Put the tap into the groove of tap collet holder and the tap is jammed by the tap collet holder. FIG..2 is for your reference.
步驟 2 : 絲攻夾頭兩傳動塊對準連接桿凹槽部份，使其卡入連接桿。

STEP.3

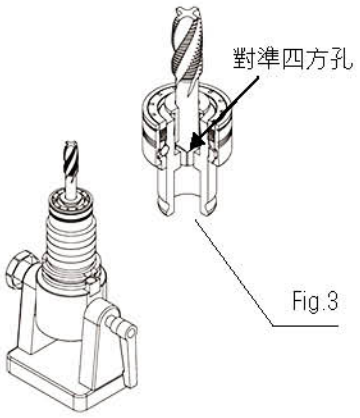

Fig.3

Step3 : Press the bushing of tap chuck down and put the tap in, which makes the shank is jammed firmly by the square. FIG 3 as your reference.
步驟 3 : 下壓絲攻夾頭之襯套，置入絲攻，使絲攻四方柄部分卡入絲攻四方孔內固定。

STEP.4

Step4 : Make sure the tap is clamped firmly before starting operation.
步驟 4 : 確實夾緊絲攻後，才可裝置使用。

Tap Chuck Manual Tap Chuck 裝配須知

CP690622

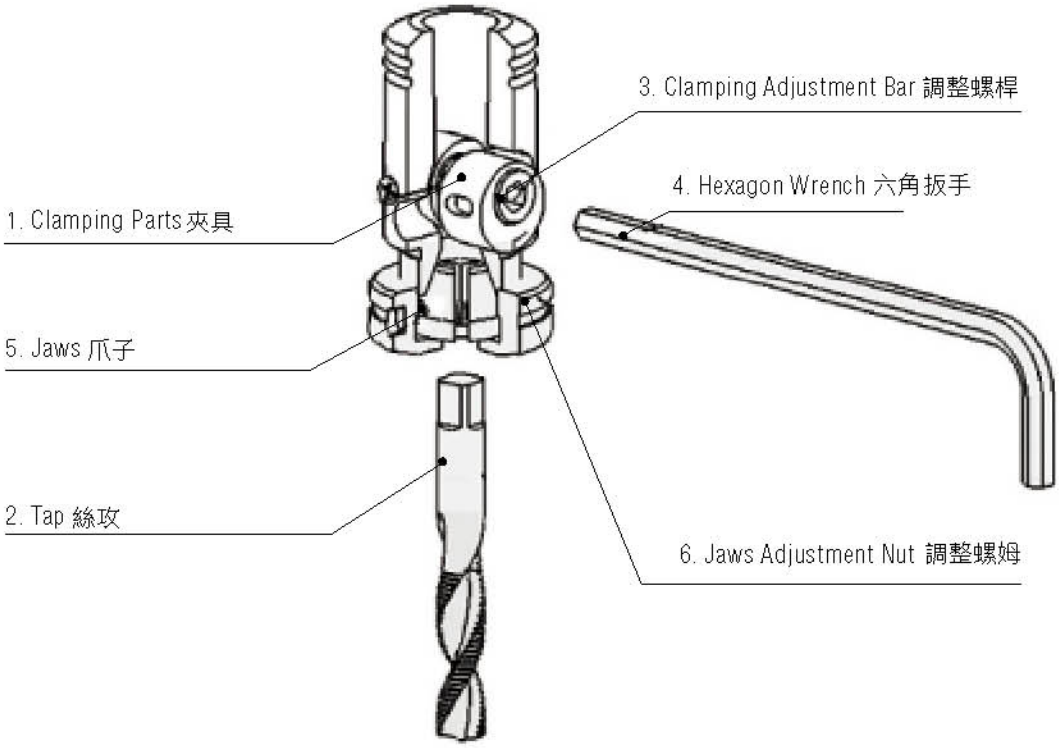

STEP.1

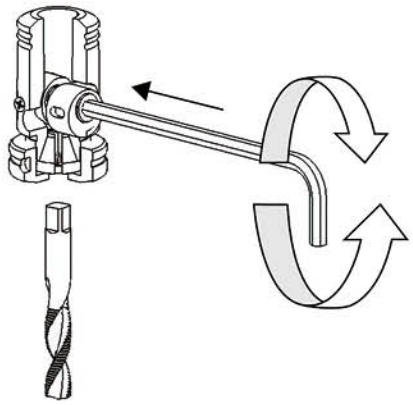

Step.1: Use No.1 Hexagon Wrench to insert No.3 Clamping Adjustment Bar to loose the No.4 Clamping Parts.

步驟 1: 使用 No.1 六角板手插入 No.3 調整螺桿，鬆開 No.4 夾具

STEP.2

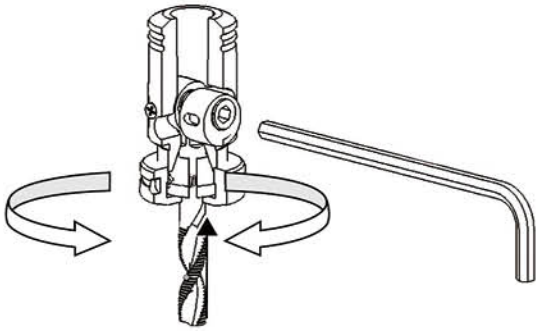

Step2 : To loose the No.6 Jaws Adjustment Nut and to insert the No.2 Tap, then tighten the No.6 Jaws Adjustment Nut. Accordingly, it will clamp the No. 5 Jaws and No.2 Tap.

步驟 2 : 鬆開 No.6 調整螺姆及插入 No.2 絲攻；接著，鎖緊 No.6 調整螺姆。於是，將會夾住 No.5 爪子以及 No.2 絲攻。

STEP.3

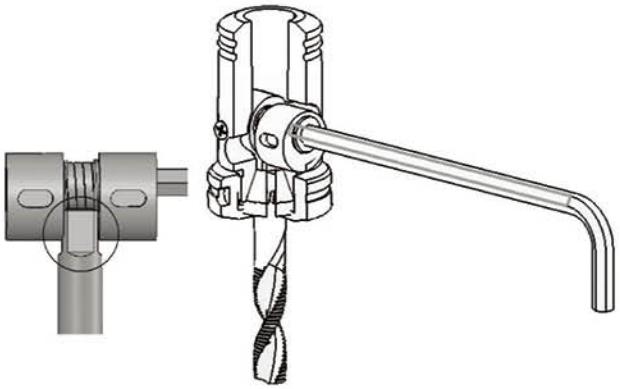

Step3 : Use No.1 Hexagon Wrench to insert No.3 Clamping Adjustment Bar, and tighten the No.4 Clamping Parts and No.2 Tap.

步驟 3 : 使用 No.1 六角板手插入 No.3 調整螺桿，並鎖緊夾具及 No.2 絲攻。

STEP.4

Step4 : Loosen No.1 Hexagon Wrench, so it may start to use.

步驟 4 : 鬆開 No.1 六角板手後，開始使用。

ER Collet Chuck Manual　ER 刀把裝配須知

CP690622

- Mount ER Collet tool holder firmly according to "HOW TO MOUNT' in this manual. Otherwise, the tool holder might be loosened, which may eventually result in serious bodily injuries or accidents for user.
- Check and confirm the tool is clamped firmly by the toolholder before starting operation. Improper clamping of the tool will cause its abnormal breakage or detaching of toolholder, which may result in serious injuries or accidents for user.
- Please use the proper tool holder to clamp the tool to avoid its abnormal runout and tool dropping off, which may result in serious injuries or accidents for user.
- DO NOT change the tool on the spindle to avoid causing serious accidents and injuries for user due to turning idly in the spindle itself. When idling, please turn power off or press Emergency Stop Button.
- DO NOT touch the tool or tool holder when rotating. Otherwise, user might be hauled by the rotating machine, which may result in serious injuries or accidents.
- DO NOT manipulate the tool holder before the spindle stops totally. Otherwise, user might be hauled by the rotating machine, which may result in serious injuries or accidents.
- DO NOT use tool holder anymore if some abnormal conditions, like cracks, breakage or transformation are detected thereon. Otherwise, it may result in serious injuries or accidents for user.
- DO NOT make any repairing, re-assembling nor remodeling on the tool holder. Otherwise, it'll cause the weak function or abnormal runout of the tool holder.
- Please operate tool holder under normal and clean usage.
- Please wipe iron filings away before and after operating tool holder. Also, it's necessary to do anti-corrosion treatment to ensure the longevity of tool holder.
- 依據此手冊中教導”裝置及固定”之步驟，正確完成裝置此刀把。否則此刀把鬆脫可能造成使用者嚴重的意外傷害。
- 開始操作前，請檢查並確認刀把是否確實地夾持住您所使用的刀具。錯誤的夾持可能產生精度差異、刀把破損或解體，進而造成使用者嚴重的意外傷害。
- 請使用適當的工具來夾持刀具，以及使用適當的刀具，以避免精度偏差及因刀具脫落而造成使用者嚴重的意外傷害。
- 請勿在主軸上更換刀把上之刀具，以免因夾持力不足而造成使用者嚴重的意外傷害。（若為在泛用機器上的直接換刀操作，請避免主軸空轉。主軸錯誤回轉時，請切斷電源，或按下緊急停止鈕，停止運轉。）
- 請勿觸碰正在轉動中的刀把或刀具，否則可能會被正在運轉中的機器拖住，造成嚴重的意外傷害。
- 主軸還未完全停止前，請勿操作刀把；否則可能會被正在運轉中的機器拖住，造成嚴重的意外傷害。
- 刀把、筒夾及刀具出現外觀破裂、外型損壞或變形等等異常狀況時，請勿再繼續使用，否則可能造成嚴重的意外傷害。
- 切勿作任何修復、重組甚至重新改造此刀把之動作。否則將造成產品機能衰減、精度不良，及引起嚴重的意外傷害。
- 請在刀把無污損的狀態下使用。
- 請於使用前、後拭淨沾粘的鐵屑，並作適當的防鏽處理，以確保刀把壽命。

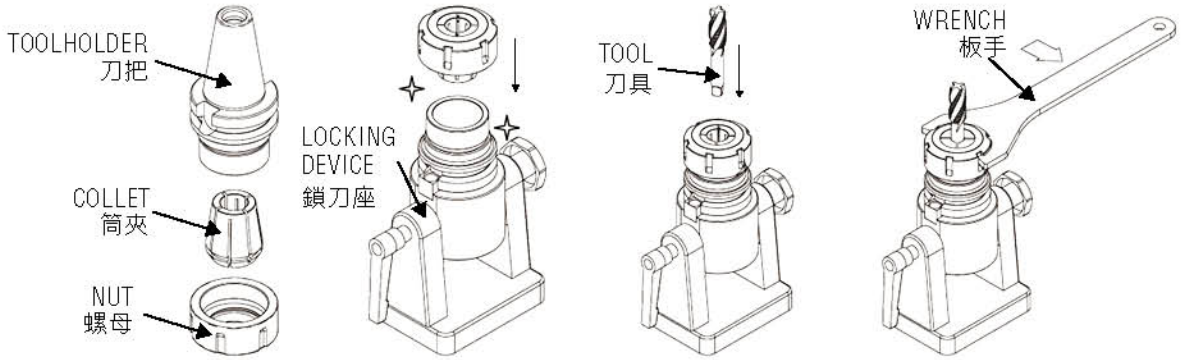

HOW TO MOUNT:

Step.1: Pease choose the collet with proper shank of tool holder and make sure if you have wiped the iron filings and dusts away before using it.

Step2 : Please put ER collet into ER nut.

Step3 : Be sure that the groove of collet and the inner of nut match well. (Please refer to the right drawing)

Step4 : Accordingly, put the tool holder into the locking device and fix its direction to avoid shaking fore and after.

Step5 : To lock ER collet and ER nut into the tool holder.

Step6 : To insert the tool into ER collet. For safety, please insert it into the bottom of ER collet or the depth of 2/3.

Step7 : Please use the attached ER wrench to tighten ER nut thus the tool can be clamped by the tool holder.

Step8 : Please operate the tool holder on the spindle after tightening the tool. If not the tool drops off and may result in serious injuries or accidents. (The operation of changing the tool directly on Universal machine shall not be limited on this instruction. Please follow above steps 1-7.)

操作步驟：

步驟 1 : 請選取與刀具柄徑適合的筒夾。使用前請確認是否已清除沾附的鐵屑或灰塵。

步驟 2 : 將 ER 筒夾及 ER 螺姆配合組裝。

步驟 3 : 確認筒夾溝槽及螺母內部卡鍾的裝配是否完全吻合 (請參照右圖)。若在未完全吻合的情況下使用可能造成刀把及筒夾損傷。

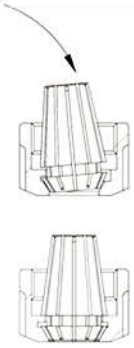

Step3

步驟 4 : 將刀把置入鎖刀座內，固定好方向避免前後搖晃。(若為在泛用機器上直接換刀使用的情況下，請注意勿使主軸空轉或錯誤運轉。)

步驟 5 : 將螺姆及筒夾鎖入刀把。

步驟 6 : 將欲使用之刀具插入筒夾中。為操作安全，請務必將刀具插入筒夾底端或 2/3 以上的深度。

步驟 7 : 使用附屬的專用扳手鎖緊螺母，使刀把夾持住刀具。

步驟 8 : 為防止刀具脫落而造成意外傷害，請確實鎖緊刀具後再裝上主軸使用。(泛用機器上的直接換刀操作不在此限，請參照步驟 1-7)。

Milling Chuck Manual　Milling Chuck 裝配須知

CP690622

- Mount Milling Chuck firmly according to "HOW TO MOUNT" in this manual. Otherwise, the Milling Chuck might be loosened, which may eventually result in serious bodily injuries or accidents for user.
- Check and confirm the tool is clamped firmly by the chuck before starting operation. Improper clamping of the tool will cause its abnormal breakage or detaching of the chuck, which may result in serious injuries or accidents for user.
- Please use the proper Milling Chuck to clamp the tool to avoid its abnormal runout and bits dropping off, which may result in serious injuries or accidents for user.
- DO NOT change the tool on the spindle to avoid causing serious accidents and injuries for user due to turning idly in the spindle itself. When idling, please turn power off or press Emergency Stop Button.
- DO NOT touch the tool or Milling Chuck when rotating. Otherwise, user might be hauled by the rotating machine, which may result in serious injuries or accidents.
- DO NOT manipulate Milling Chuck before the spindle stops totally. Otherwise, user might be hauled by the rotating machine, which may result in serious injuries or accidents.
- DO NOT use Milling Chuck anymore if some abnormal conditions, like cracks, breakage or transformation are detected thereon. Otherwise, it may result in serious injuries or accidents for user.
- DO NOT make any repairing, re-assembling nor remodeling on Milling Chuck. Otherwise, it'll cause the weak function or abnormal runout of the Chuck.
- Please operate Milling Chuck under normal and clean usage.
- Please wipe iron filings away before and after operating Milling Chuck. Also, it's necessary to do anti-corrosion treatment to ensure the longevity of this Chuck.
- 依據此手冊中教導”裝置及固定”之步驟，正確完成裝置此刀把。否則此刀把鬆脫可能造成使用者嚴重的意外傷害。
- 開始操作前，請檢查並確認刀把是否確實地夾持住您所使用的刀具。錯誤的夾持可能產生精度差異、刀把破損或解體，進而造成使用者嚴重的意外傷害。
- 請使用適當的工具來夾持刀具，以及使用適當的刀具，以避免精度偏差及因刀具脫落而造成使用者嚴重的意外傷害。
- 請勿在主軸上更換刀把上之刀具，以免因夾持力不足而造成使用者嚴重的意外傷害。(若為在泛用機器上的直接換刀操作，請避免主軸空轉。主軸錯誤回轉時，請切斷電源，或按下緊急停止鈕，停止運轉。)
- 請勿觸碰正在轉動中的刀把或刀具，否則可能會被正在運轉中的機器拖住，造成嚴重的意外傷害。
- 主軸還未完全停止前，請勿操作刀把；否則可能會被正在運轉中的機器拖住，造成嚴重的意外傷害。
- 刀把、筒夾及刀具出現外觀破裂、外型損壞或變形等等異常狀況時，請勿再繼續使用，否則可能造成嚴重的意外傷害。
- 切勿作任何修復、重組甚至重新改造此刀把之動作。否則將造成產品機能衰減、精度不良，及引起嚴重的意外傷害。
- 請在刀把無污損的狀態下使用。
- 請於使用前、後拭淨沾粘的鐵屑，並作適當的防鏽處理，以確保刀把壽命。為長期保持精度穩定，請於加工完畢後，將筒夾及銑刀卸除。

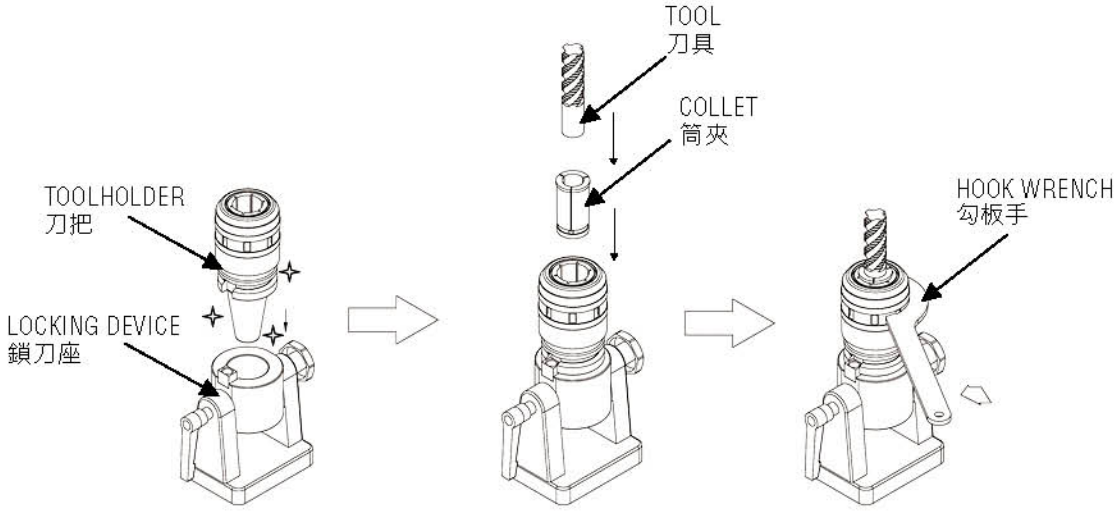

HOW TO MOUNT:

Step.1: Please use the tool with tolerance h7 Shank, which keeps the tool and straight collet under the best clamping condition. It not only affects the capacity of the chuck, but also hurts the straight collet and Milling chuck itself if using the broken tool.

Step2 : Accordingly, put the tool holder into the locking device and fix its direction to avoid shaking fore and after.

Step3 : Please put the straight collet and the tool into the Milling chuck by steps.

Step4 : For safety, please insert the tool into the bottom of collet or the depth of 2/3.

Step5 : Please use the attached hook wrench to tighten the nut with the strength 60~85Nm, thus the tool holder could maximum the torsion to 1500Kg-Cm. Do not rotate or knock the nut excessively for fear of the abnormal runout and breakdown.

Step6 : Please operate the Milling chuck on the spindle after tightening the tool. (The operation of changing the tool directly on Universal machine shall not be limited on this instruction. Please follow above steps 1-5.)

操作步驟：

步驟 1：請使用公差 h7 柄徑的刀具。刀具與直式筒夾間無任何間隙時可達成夾持的最佳狀態。若使用損傷的刀具不僅會影響夾持力，亦可能造成直式筒夾及刀把的損傷。

步驟 2：先將刀把置於鎖刀座內，並固定好方向避免前後搖晃。(若為在泛用機器上直接換刀使用的情況下，請注意勿使主軸空轉或錯誤運轉。)

步驟 3：請依序將直式筒夾及所需使用之刀具置入刀把螺母中。

步驟 4：為操作安全，請務必將刀具插入筒夾底端或2/3以上的深度。

步驟 5：使用附屬專用板手，鎖緊螺姆，使刀把夾持住刀具。鎖緊力道約 5~8Kg，此時刀把最大扭力約達1500Kg-Cm 。請勿過度旋轉或敲擊螺母以免影響精度及造成故障。

步驟 6：鎖緊刀具後，才可裝置於主軸上使用。(泛用機器上的直接換刀操作不在此限，請參照步驟 1~5。)

Hex Key Drill Chuck Manual 齒輪式夾頭操作須知

CP690622

Thank you very much for purchasing our product. Please do not fail to read this manual before use.

After reading, please keep this manual in such a place where it will be easily available for any persons at any time.

感謝您購買本公司之產品，使用此產品前，請先閱讀此操作手冊。

閱讀後，請將此操作手冊放置於任何隨時隨地可取得之處。

■ CAUTION 注意事項：

- Clamping or releasing the cutting tool only at standstill of machine spindle or outside the machine.
- Please spray oil on the surface to prevent corrosion before storing Hex Key Drill Chuck.
- 只在主軸停止或機器外時才鎖緊 / 鬆開刀具
- 在貯放齒輪式夾頭之前，請在表面噴上防鏽油來防止生鏽。

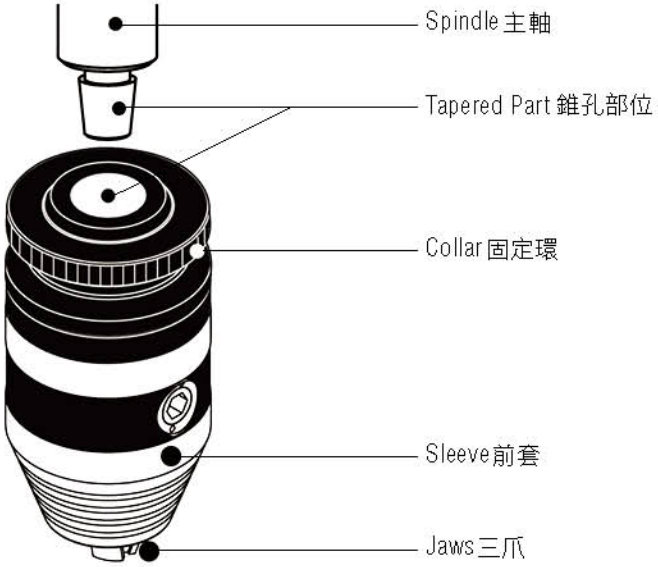

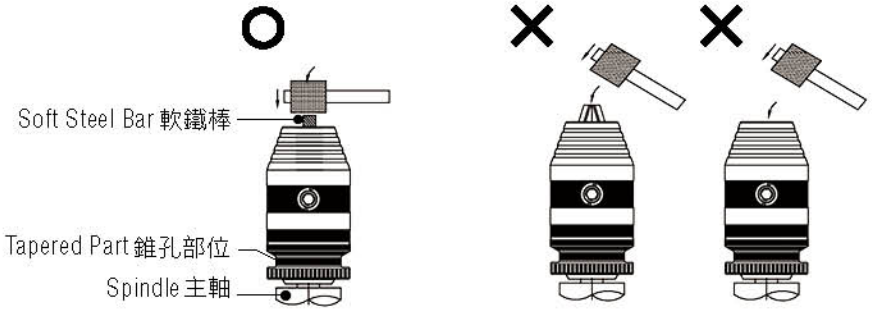

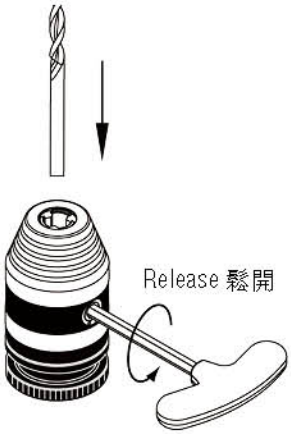

Fig.1

Fig.2

Fig.3

HOW TO MOUNT:

Step.1:Hex Key Drill Chuck is clamped by Hex Key on side of the drill chuck actuating a bevel gear. Turn hex key counter clockwise to open the drill chuck, clockwise to close it. Open the jaw of Hex Key Drill Chuck wide enough to insert the cutting tool. (FIG.1)

Step2 : 2. Turn Hex Key clockwise to clamp the cutting tool. (FIG.2)

Step3 : Hex Key Drill Chuck is ready for work. (FIG.3)

Step4 : Please turn Hex Key counter clockwise to release the cutting tool and move the cutting tool.

裝置固定步驟：

步驟 1：齒輪式夾頭是以六角板手驅動夾頭旁的傘齒輪來夾持刀具。逆轉六角板手可打開三爪；正轉六角板手則可關閉三爪。先將夾頭三爪開至足以放入刀具。

步驟 2：正轉六角板手使夾頭能夾緊刀具。（圖 1）

步驟 3：則齒輪式夾頭可開始加工。（圖 2）

步驟 4：請逆轉六角板手鬆開且移開刀具。（圖 3）

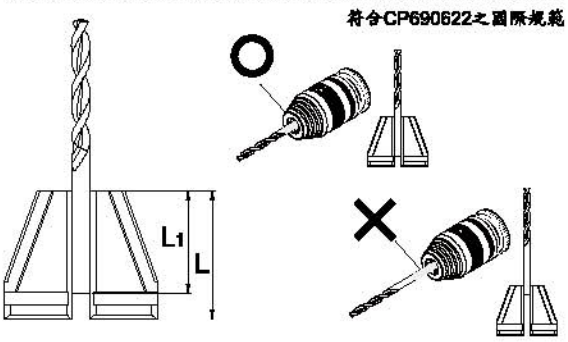

Spec. of Drill Chuck 規格	Length of Three Jaw L (mm) 夾爪長度 (mm)	Holding Capacity L1 (mm) 夾持量 L1 (mm)
5/8" (16mm)	30	20
1/2" (13mm)	28	19
3/8" (10mm)	26	17
1/4" (6.5mm)	20	13
1/8" (3mm)	14	9
5/16" (8mm)	26	17

ATTENTION:

"Easy to operate. Convenience and the Higher Safety" are the great advantage of this kind of Drill Chuck. When operating this product, you have to read the MANUAL carefully to keep from causing the accident and promote longevity. Please follow the point as below:

When you operate, the length of holding capacity (L1) shall insert drill bit to the bottom or at least insert to 2/3 of the length of three jaws (L).

Every kinds of specification (Drill Chuck) for the length of three jaws (L) & the holding capacity (L1) is as followers. Please refer to it.

注意事項：

本產品之最大優點是簡單容易操作、快速方便、安全性極高，當使用本產品時，為了減少意外事故發生，延長產品壽命，必須詳細閱讀操作說明書，並遵守以下列舉的基本事項：夾持長度 (L1) 應將鑽頭柄插入到底或至少爪長 (L) 的 2/3。

Stainless Steel Drill Chuck Manual Used In Medical Industry
醫療級不鏽鋼夾頭清潔保養說明書

■ CAUTION 注意事項：

- Must clean the chuck with neutral water or neutral detergent.
- Must wipe the chuck with soft cloth after cleaning with neutral water.
- Steel brush is prohibited to avoid the damage of surface and caused corrosion of chuck.
- Acidity or alkalinity detergent is prohibited to avoid the damage of surface and caused corrosion of chuck.
- After cleaning and wiping the chuck, please put it on a dry clean place.

- 清洗不鏽鋼夾頭必須使用中性水質或中性清潔劑清洗。
- 清洗時請使用柔質布做擦拭清潔。
- 禁止使用鋼刷以免破壞防銹保護層而導致表面生銹。
- 禁止使用酸性與鹼性液體清洗，以免破壞防銹保護層而導致表面生銹。
- 表面清潔並擦拭乾淨后，請放置乾燥乾淨處。

■ STATEMENT 聲明：

- Manufacturer has the right to modify the dimension or spec. and no need to inform the customers in advance.
- Manufacturer will not take the responsibility if improper use happened or not follow the manual.

- 製造商保有尺寸、規格更改權利，不另做說明。
- 若因清潔不當或未依本說明書步驟保養導致夾頭生銹，本公司不負任何責任。

Chum Power

銓寶精密配件產品型錄

銓寶工業股份有限公司
CHUMPOWER MACHINERY CORPORATION

No.688-1, Sec. 3, Zhong-Shan Rd., Wuri Dist., Taichung City 414, Taiwan
414 台中市烏日區中山路三段 688-1號

TEL: 886 4 2338 8289 | FAX: 886 4 2336 5626
Email: dali@chumpower.com

* Reserve the right to modification due to technical requirement. Please refer to the physical product. * 因為技術上的需要，本公司保有變動的權利，產品以實物為主。

Chum Power TOOL CATALOG 銓寶精密配件產品型錄